OBELUX
AVIATION LIGHTS

Obelux Medium-Intensity 2000cd compact series version manual

Medium-intensity 2,000cd red aviation obstruction light

ICAO Medium-Intensity Type B/C
FAA L-864, L-885
NVG Compliant Infrared 850nm

CONTENTS

1 ABOUT THIS PRODUCT 4

1.1 ICAO MODELS PRODUCT CODES 5
1.2 FAA MODELS PRODUCT CODES 6
1.3 PRODUCT HIGHLIGHTS 7

2 SAFETY INSTRUCTIONS 10

2.1 GENERAL CONSIDERATIONS 10
2.2 ENVIRONMENTAL CONSIDERATIONS 10
2.3 PERSONAL CONSIDERATIONS 10

3 INSTALLATION 11

3.1 DEVICE INSTALLATION 11
3.2 WIRING 11
3.2.1 Mains In/Out (AC versions) 12
3.2.2 DC In/Out (DC versions) 12
3.2.3 RS-485 (Modbus) In/Out 12
3.2.4 Alarm Relay Output 12
3.2.5 Chaining Lights 13

4 OPERATION 14

4.1 ICAO MODELS, STAND-ALONE MODE 15
4.2 FAA MODELS, STAND-ALONE MODE 16
4.3 MODBUS SLAVE MODE 17
4.4 MODBUS MASTER MODE (LIGHT OPERATES AS MODBUS MASTER) 18
4.5 TEST MODE 19
4.6 HEATER OPERATION 20
4.7 SMART HEATER (DC MODELS) 20
4.8 PROGRAMMING TERMINAL 20
4.9 CAUSES FOR ALARM 20
4.10 ON-BOARD LEDS 21
4.11 GPS OPERATION 21
4.12 TROUBLESHOOTING 21
4.13 SPARE PARTS 22

© Obelux Oy 2024

Changelog

Version	Date	Description	Author
0.1	02.01.2020	Document created	JSi
1.0	19.05.2020	Release	JSi
1.1	05.10.2020	Updated product codes, heater	JSi
1.2	21.09.2021	Added Smart heater, programming terminal	JSi
1.3	15.12.2021	Updated FAA models product codes	JSi
1.4	16.03.2022	Updated main PCB to version B	JSi
1.5	09.12.2024	Updated chapters 1.1 , 1.2, 4.1 – 4.5	TRe
1.6	15.01.2025	Updated product codes	JSi

Acronyms and Abbreviations

FAA	Federal Aviation Administration
FPM	Flashes Per Minute
GPS	Global Positioning System
ICAO	International Civil Aviation Organization
IR	Infrared
LED	light emitting diode
MI	Medium intensity
PCB	Printed Circuit Board

© Obelux Oy 2024

1 ABOUT THIS PRODUCT

Obelux Medium intensity compact series LED obstruction lights provide 2,000cd color aviation red light and Night Vision Goggle (NVG) compliant infrared (850 nm) light. Both Stand-alone and Modbus operations are supported. In Stand-alone mode, no external controllers are required to run the light. In Modbus operation, the light is controlled with an Obelux controller as a part of an aviation light system.

Features:
► Fault monitoring with dry contact alarm relay
► Photocell
► GPS synchronization
► Support for operating in cold climates
► Visibility sensor interface controlled luminous output levels (10%, 30%, and 100%)
► Hot-start for radar controlled systems
► Easy to chain (no need for junction box)
► Embedded Web server

Modbus operation:
Can be connected to the following Obelux Controllers
► CP Series (Interfaces: Ethernet TCP/IP and RS-485/Modbus, AC or DC)
► CP-M1 Series (Interface: RS-485/Modbus, AC or DC)

© Obelux Oy 2024

1.1 ICAO models product codes

Order code:	Output:	ICAO	Operating voltage	Nominal voltage	Infra-red	IR	Photo-cell	Alarm Relay	RS-485 Modbus	GPS	Heater (CCV)
MI-ICAO-AC-2KR-IR [-x] [-y]	2 000 cd / 200 cd	Type B/C	90-265 V_{AC}	100-240 V_{AC}	Yes	Yes	Yes	Yes	Yes	Yes	Yes
MI-ICAO-AC-2KR-IR-B [-y]	2 000 cd / 200 cd	Type B/C	90-265 V_{AC}	100-240 V_{AC}	Yes	Yes	Yes	Yes	No	No	Yes
MI-ICAO-AC-2KR-IR-E1 [-x] [-y]	2 000 cd / 200 cd	Type B/C*	90-265 V_{AC}	100-240 V_{AC}	Yes	Yes	Yes	Yes	Yes	Yes	Yes
MI-ICAO-AC-2KR-IR-E1-B [-y]	2 000 cd / 200 cd	Type B/C*	90-265 V_{AC}	100-240 V_{AC}	Yes	Yes	Yes	Yes	No	No	Yes
MI-ICAO-DC1224-2KR-IR [-x] [-y]	2 000 cd / 200 cd	Type B/C	10-30 V_{DC}	12/24 V_{DC}	Yes	Yes	Yes	Yes	Yes	Yes	Yes
MI-ICAO-DC1224-2KR-IR-B [-y]	2 000 cd / 200 cd	Type B/C	10-30 V_{DC}	12/24 V_{DC}	Yes	Yes	Yes	Yes	No	No	Yes
MI-ICAO-DC1224-2KR-IR-E1 [-x] [-y]	2 000 cd / 200 cd	Type B/C*	10-30 V_{DC}	12/24 V_{DC}	Yes	Yes	Yes	Yes	Yes	Yes	Yes
MI-ICAO-DC1224-2KR-IR-E1-B [-y]	2 000 cd / 200 cd	Type B/C*	10-30 V_{DC}	12/24 V_{DC}	Yes	Yes	Yes	Yes	No	No	Yes
MI-ICAO-DC2448-2KR-IR [-x] [-y]	2 000 cd / 200 cd	Type B/C	20-60 V_{DC}	48 V_{DC}	Yes	Yes	Yes	Yes	Yes	Yes	Yes
MI-ICAO-DC2448-2KR-IR-B [-y]	2 000 cd / 200 cd	Type B/C	20-60 V_{DC}	48 V_{DC}	Yes	Yes	Yes	Yes	No	No	Yes
MI-ICAO-DC2448-2KR-IR-E1 [-x] [-y]	2 000 cd / 200 cd	Type B/C*	20-60 V_{DC}	48 V_{DC}	Yes	Yes	Yes	Yes	Yes	Yes	Yes
MI-ICAO-DC2448-2KR-IR-E1-B [-y]	2 000 cd / 200 cd	Type B/C*	20-60 V_{DC}	48 V_{DC}	Yes	Yes	Yes	Yes	No	No	Yes

B = Basic model (no GPS, no Modbus)

[-x]: Optional extension card
-IO = 4 Input 4 Output (IO) interface
-E = Ethernet interface (1 x RJ45 connector)
-EF = 4-port switch (2 x RJ-45 connectors + 2 x Fiber SC Multimode female connectors)

Example: MI-ICAO-AC-2KR-IR-E (AC model with Ethernet extension card)

[-y]: Warranty option
-10 = 10-year warranty

Example: MI-ICAO-AC-2KR-IR-10 (AC model with 10-year warranty)

Type B/C* (E1) = these product variants fulfil also the -1° and -10° vertical elevation angles maximum intensities requirements

Available mounting set options:
MS-MI-H01 (mounting bracket as AISI304 acid-proof stainless steel, nuts and bolts A4 steel)
MS-MI-H02 (mounting bracket as AISI316 acid-proof stainless steel, nuts and bolts A4 steel)
MS-MI-H03 (mounting bracket as AISI316 acid-proof stainless steel, nuts and bolts A4 steel)
MS-MI-V01 (mounting set as AISI316 acid-proof stainless steel, nuts and bolts A4 steel)
MS-MI-V02 (mounting bracket as AISI304 acid-proof stainless steel, nuts and bolts A4 steel)

© Obelux Oy 2024

1.2 FAA models product codes

Order code:	Output:	FAA	Operating voltage	Nominal voltage	Infra-red	IR	Photo-cell	Alarm Relay	RS-485 Modbus	GPS	Heater (CCV)
MI-FAA-AC [-x] [-y]	2 000 cd / 200 cd	L-864, L-885	90-265 V_{AC}	100-240 V_{AC}	Yes	Yes	Yes	Yes	Yes	Yes	Yes
MI-FAA-AC-B [-y]	2 000 cd / 200 cd	L-864, L-885	90-265 V_{AC}	100-240 V_{AC}	Yes	Yes	Yes	Yes	No	No	Yes
MI-FAA-DC1224 [-x] [-y]	2 000 cd / 200 cd	L-864, L-885	10-30 V_{DC}	12/24 V_{DC}	Yes	Yes	Yes	Yes	Yes	Yes	Yes
MI-FAA-DC1224-B [-y]	2 000 cd / 200 cd	L-864, L-885	10-30 V_{DC}	12/24 V_{DC}	Yes	Yes	Yes	Yes	No	No	Yes
MI-FAA-DC2448 [-x] [-y]	2 000 cd / 200 cd	L-864, L-885	20-60 V_{DC}	48 V_{DC}	Yes	Yes	Yes	Yes	Yes	Yes	Yes
MI-FAA-DC2448-B [-y]	2 000 cd / 200 cd	L-864, L-885	20-60 V_{DC}	48 V_{DC}	Yes	Yes	Yes	Yes	No	No	Yes

B = Basic model (no GPS, no Modbus)

[-x]: Optional extension card
-IO = 4 Input 4 Output (IO) interface
-E = Ethernet interface (1 x RJ45 connector)
-EF = 4-port switch (2 x RJ-45 connectors + 2 x Fiber SC Multimode female connectors)

Example: MI-FAA-AC-E (AC model with Ethernet extension card)

[-y]: Warranty option
-10 = 10-year warranty

Example: MI-FAA-AC-10 (AC model with 10-year warranty)

Available mounting set options:
MS-MI-H01 (mounting bracket as AISI304 acid-proof stainless steel, nuts and bolts A4 steel)
MS-MI-H02 (mounting bracket as AISI316 acid-proof stainless steel, nuts and bolts A4 steel)
MS-MI-H03 (mounting bracket as AISI316 acid-proof stainless steel, nuts and bolts A4 steel)
MS-MI-V01 (mounting set as AISI316 acid-proof stainless steel, nuts and bolts A4 steel)
MS-MI-V02 (mounting bracket as AISI304 acid-proof stainless steel, nuts and bolts A4 steel)

© Obelux Oy 2024

1.3 Product highlights

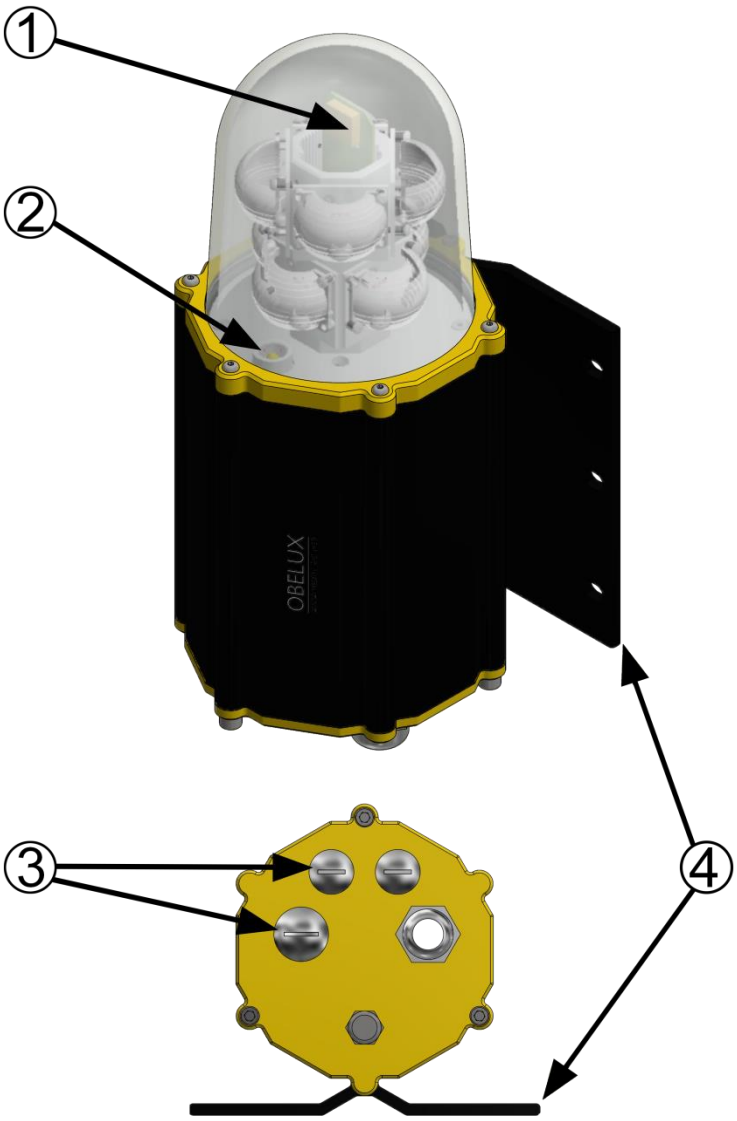

Figure 1: Main functional parts of a light

1. Location of photocell and GPS (do not cover)
2. Bubble level
3. Location of cable glands (M20 (2 pcs), M25 (2 pcs))
4. Bottom plate

Factory installation:

- All models: 1 M25 gland attached to light, all other glands sealed

Accessories:

- Basic models: 1 M25 gland
- Other models: 1 M25 gland, 2 M20 glands

© Obelux Oy 2024

1. RS-485 termination DIP switch
2. Configuration DIP switches
3. Reset button
4. Status indicator LEDs
5. RS-485 OUT connector
6. Mains power OUT connector
7. Mains power IN connector
8. Alarm relay connector
9. RS-485 IN connector
10. Programming terminal
11. Photocell
12. Alarm indicator LED (do not cover)
13. GPS (do not cover)

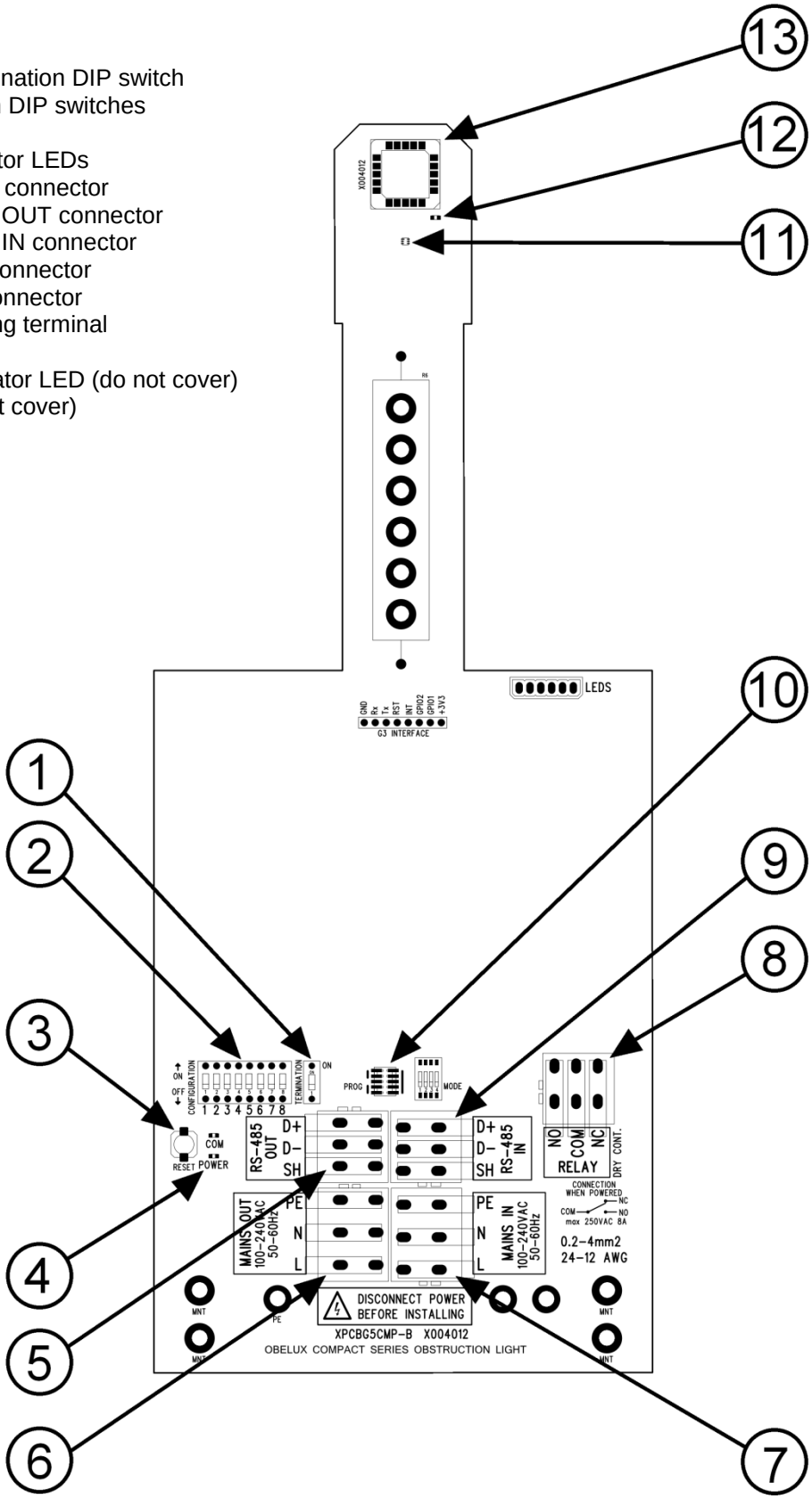

Figure 2: Main PCB (AC version)

(E) 1-port Ethernet add-on card
(1) Ethernet RJ-45 copper connector
(2) Ethernet connector

(EF) 4-port Ethernet add-on card (Ethernet switch)
(1) Ethernet RJ-45 copper connectors (2)
(2) Fiber SC multimode Female connectors (2)

(IO) I/O interface add-on card
(1) GPIO outputs
(2) GPIO inputs

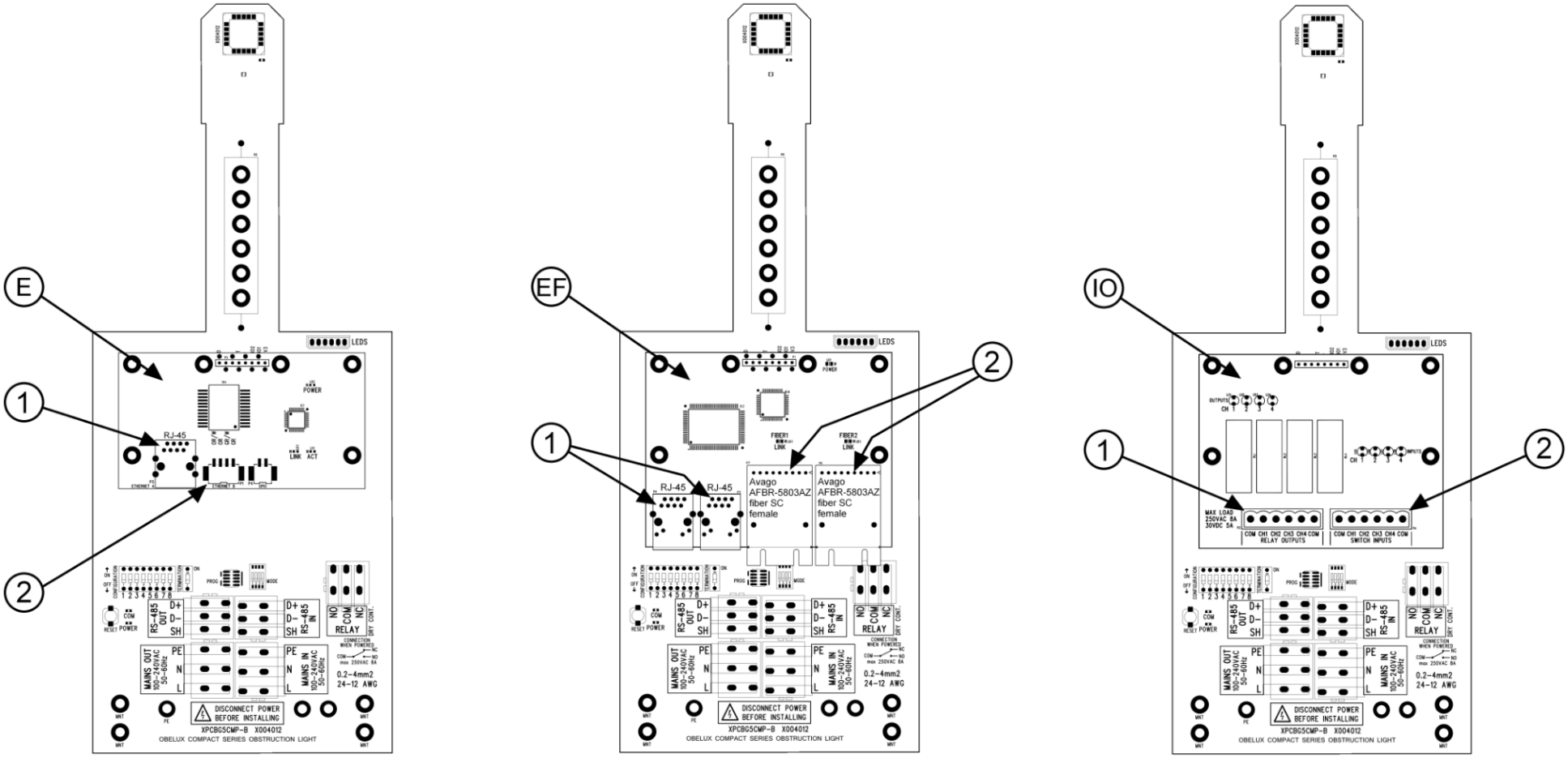

Figure 3: Main PCB with add-on cards for Ethernet and IO interfaces

2 SAFETY INSTRUCTIONS

In this section are general safety instructions for the device. Please read the instructions carefully before installing or using the device to avoid any personal, environmental or material damages.

2.1 General considerations

Install device observing manufactures installation guide.
Use only cables and connectors specified by the manufacturer and in compliance with local electrical code.
Keep your device away from heat sources, dust, smoke or other harmful substances.
Do not modify the device unless otherwise approved by the manufacturer.
If you have any error situation with the device, do not try to fix it by yourself, contact your reseller.

2.2 Environmental considerations

The European Parliament and the Council of European Union issued directive 2012/19/EU to contribute to sustainable production and consumption by, as a first priority, the prevention of WEEE and, in addition, by the re-use, recycling and other forms of recovery of such wastes so as to reduce the disposal of waste and to contribute to the efficient use of resources and the retrieval of valuable secondary raw materials.
Obelux aviation obstacle light products sold inside European Union can be returned to manufacturer if no local WEEE separate collection and re-use services are available. Please contact Obelux for details.
Obelux does not refurbish returned items but forwards them to authorized WEEE treatment facility.

2.3 Personal considerations

HIGH VOLTAGE! Device contains high voltage which is very dangerous; do not try to service the device when it is powered on.
Obelux aviation obstruction lights are Class 2M LED devices. This class is safe for accidental viewing under all operating conditions. However, it may not be eye-safe for a person who deliberately stares into the LED beam by overcoming their natural aversion response to the very bright light.

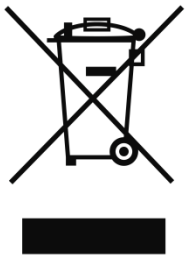

3 INSTALLATION

3.1 Device installation

Install the obstruction light to selected mounting point using quality-made fasteners. Level the light using a bubble level if necessary. Tighten bolts and nuts. The light has 6 holes for M8 bolts on the mounting plate. Photocell is located on top of the light under the glass and should have an uninterrupted view of the sky to work correctly. There are two different size cable glands used on the device: M25 cable glands for 6-17 mm cable diameter and M20 cable glands for 6-12 mm cable diameter. Make sure that all unused glands or gland holes are sealed.

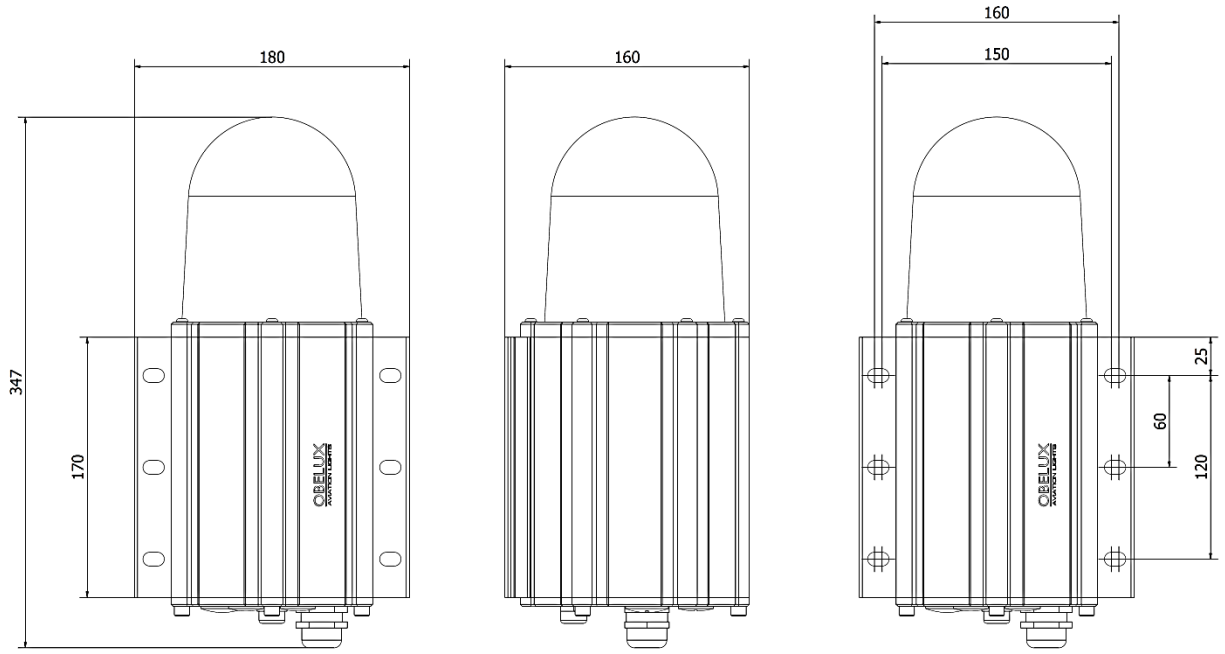

Figure 4: Dimensions (mm)

3.2 Wiring

Route cables using cable glands on the back of the light. Connect power cable wires securely to Power IN terminal block connector. Power OUT terminal can be used to distribute power to the next light. Connect RS-485 cable wires to RS-485 IN connector. RS-485 OUT connector can be used to distribute data signals to the next light. Connect alarm relay cable wires to alarm relay connector. Lights are easy to chain using the lights' internal connectors.

Mains Power **Alarm relay/RS-485**

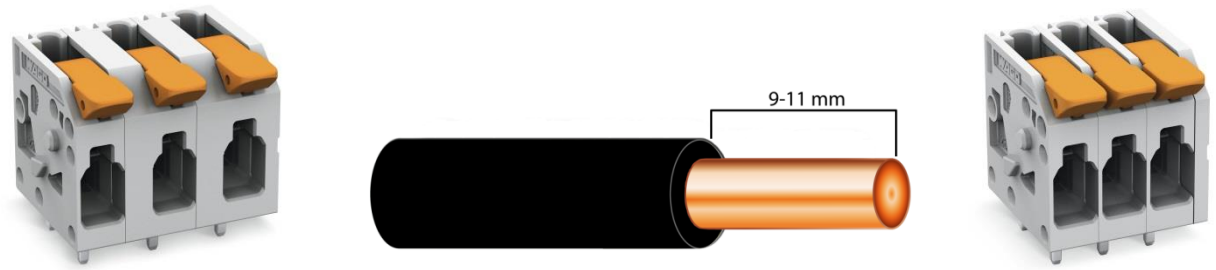

Figure 5: Terminal block connectors and wire strip length

3.2.1 Mains In/Out (AC versions)

Mark	Description	Information
L	Live terminal	Connect the mains power supply Live (brown) wire into this pole.
N	Neutral terminal	Connect the mains power supply Neutral (blue) wire into this pole.
PE	Protective earth	Connect the protective earth (yellow/green) wire into this pole.

Use a single-phase supply with Protective Earth. The connectors are Wago Push-in CAGE CLAMP® type. The Mains Out connector can be used to distribute power to the next light in the network.

Conductor cross-section	0.2mm² - 4mm² (24-12 AWG)
Recommended conductor size	2.5mm² (14 AWG)

3.2.2 DC In/Out (DC versions)

Mark	Description	Information
+	Positive	Connect the power supply positive wire into this pole.
−	Negative	Connect the power supply negative wire into this pole.
GND	Ground	Connect the power supply ground wire into this pole.

The connectors are Wago Push-in CAGE CLAMP® type. The DC Out connector can be used to distribute power to the next light in the network.

Conductor cross-section	0.2mm² - 4mm² (24-12 AWG)
Recommended conductor size	2.5mm² (14 AWG)

3.2.3 RS-485 (Modbus) In/Out

Mark	Description	Information
D+	Data +	RS-485 non-inverting pin
D−	Data −	RS-485 inverting pin
SH	Shield	Shield

The RS-485 network (bus) input/output. The RS-485 Out connector can be used to distribute data signals to the next light in the network. Unused connectors can be left floating, i.e. no wiring there is required. The connector is Wago Push-in CAGE CLAMP® type.

Conductor cross-section	0.2mm² - 4mm² (24-12 AWG)
Recommended conductor size	0.75mm² - 1,5mm² (20-16AWG) or CAT cable

3.2.4 Alarm Relay Output

Mark	Description	Information
NO	Normally Open	Normally open contact; in alarm, connected with COM
COM	Common	Common relay contact
NC	Normally Connected	Normally connected with COM; in alarm, open contact

Unused alarm relay connectors can be left floating, i.e. no wiring there is required. The connector is Wago Push-in CAGE CLAMP® type.

Conductor cross-section	0.2mm² - 4mm² (24-12 AWG)
Recommended conductor size	0.75mm² - 1,5mm² (20-16AWG) or CAT cable
Relay ratings	250VAC, 8A; 50VDC, 1A

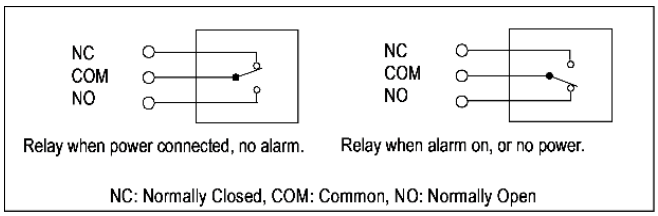

3.2.5 Chaining Lights

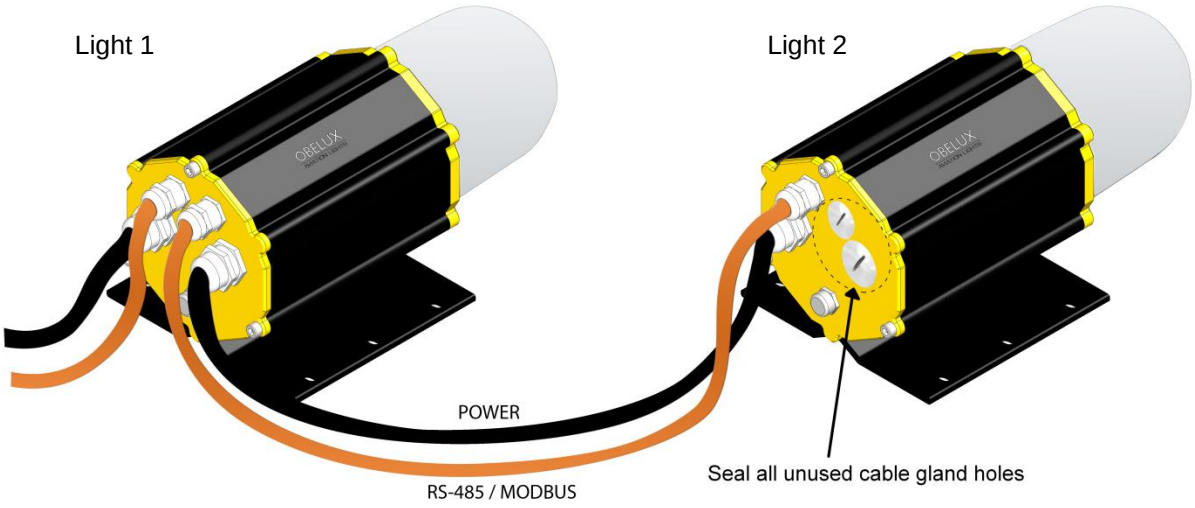

Figure 6. Chaining lights

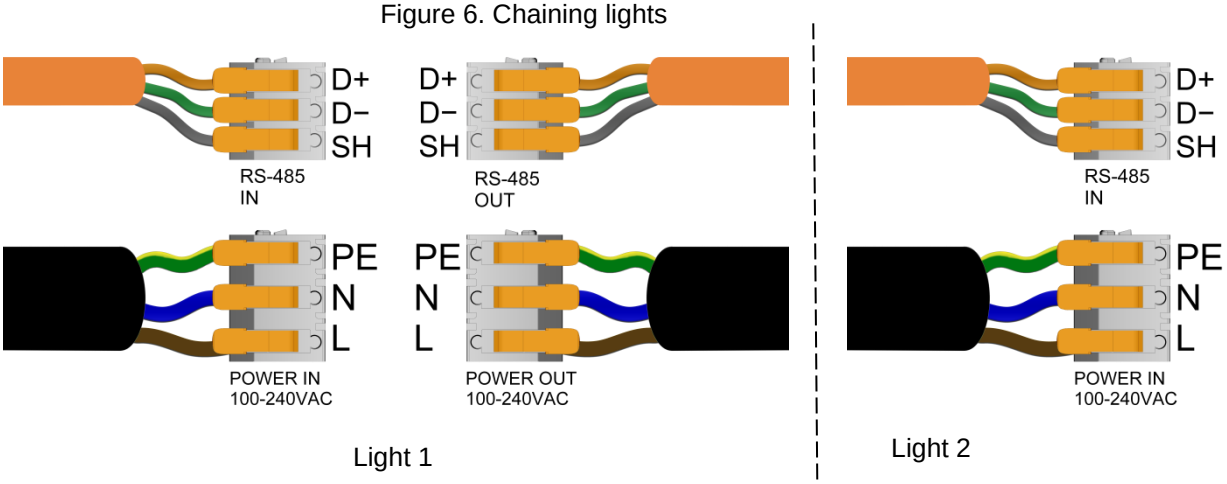

Figure 7. Distributing power and data to the next light of the network (AC version)

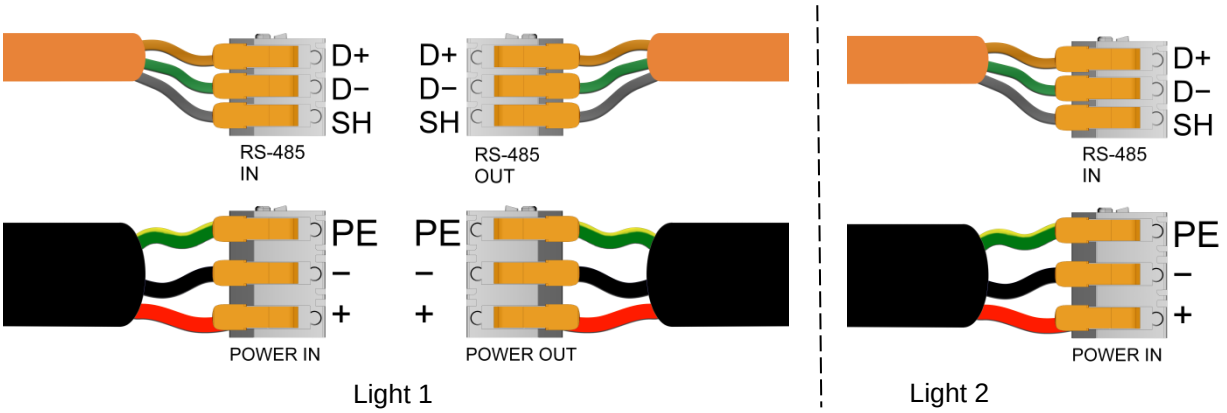

Figure 8: Distributing power and data to the next light of the network (DC version)

Remember to set the RS-485 termination DIP switch on both ends of the RS-485/Modbus bus (check Figure 2 (1) for switch location).

© Obelux Oy 2024

4 OPERATION

To configure the obstruction light, open the three M6 screws that secure the lower flange to the chassis using a hex key and pull out the PCB. Using the configuration DIP switches, configure the desired parameters into the light. The DIP switches are numbered 1-8. Embedded software in the obstruction light reads configuration switches regularly. Configuration change becomes effective within a few seconds.
The light can be configured between two different operating modes. Light reset is needed when changing between the modes.

Stand-alone mode: In this mode, lights operation is configured with its DIP switches. No additional controllers are needed. The light will use its internal photocell to determine the time of day (day, twilight or night). The light will change its flashing mode based on photocell data and how the user has configured the light. The lights will synchronize their flashing with the built-in GPS module. After start-up, it will take some time for the light to acquire a GPS lock.

Modbus mode: In this mode, the light is being controlled with an additional Obelux controller. If connection is lost to the controller, the light will keep working on its own. It will use its internal photocell and GPS to synchronize flashing and determine the time of day. The light will return to normal operation when the connection is recovered.

© Obelux Oy 2024 Technical information in this document is subject to change without notice.

4.1 ICAO models, stand-alone mode

In stand-alone mode DIP switches 1 - 6 are used as following:

Flashing mode is selected with DIP switches 1-3.

DIP switch			Flashing mode
1	2	3	Night
off	off	off	2,000cd red, ICAO (flashing, check DIP switches 4-5)
on	off	off	2,000cd red and infrared, ICAO (flashing, check DIP switches 4-5) *
off	on	off	2,000cd red (steady)
on	on	off	2,000cd red and infrared (steady)
off	off	on	200cd red and infrared, ICAO (flashing, check DIP switches 4-5)
on	off	on	200cd red and infrared (steady)
off	on	on	Reserved
on	on	on	Reserved

Flashing rate is selected with DIP switches 4-5. Steady modes don't flash. A steady mode can be selected with DIP switches 1-3.

DIP switch		Flash rate (FPM)
4	5	
off	off	20
on	off	30
off	on	40 *
on	on	60

Photocell operation is configured with DIP switch 6. When photocell controls the light, the light will change its flashing mode based on ambient luminosity. The obstruction light turns on when the ambient light level has dropped below the defined level. The light turns off when the ambient light level has exceeded the defined value. The turn-on and turn-off times are approximately 3 minutes.

DIP switch	Photocell mode
6	
off	Photocell is disabled (light is on all the time) *
on	Photocell controls the light

Stand-alone mode is selected with DIP switches 7 and 8.

DIP switch		Flash rate (FPM)
7	8	
off	**off**	**Stand-alone mode**. Modbus (RS-485) is not used for control of the light (but may still be used with configuration tools). *
on	**off**	**Stand-alone mode, Modbus master mode** (light is Modbus Master).
off	on	Modbus slave mode > see chapter 4.3 for usage of DIP switches 1 – 6
on	on	Test mode > see chapter 4.5 for usage of DIP switches 1 – 6

* Factory default

© Obelux Oy 2024

4.2 FAA models, stand-alone mode

In stand-alone mode DIP switches 1 - 6 are used as following:

Flashing mode is selected with DIP switches 1-3.

DIP switch			Flashing mode
1	**2**	**3**	**Night**
off	off	off	2,000cd red and infrared (flashing) *
on	off	off	2,000cd red (flashing)
off	on	off	Reserved
on	on	off	Reserved
off	off	on	Reserved
on	off	on	Reserved
off	on	on	Reserved
on	on	on	Reserved

The flashing rate is selected with DIP switches 4-5. Steady modes don't flash. A steady mode can be selected with DIP switches 1-3.

DIP switch		Flash rate (FPM)
4	**5**	
off	off	20
on	off	30
off	on	40 *
on	on	60

Photocell operation is configured with DIP switch 6. When photocell controls the light, the light will change its flashing mode based on ambient luminosity. The obstruction light turns on when the ambient light level has dropped below the defined level. The light turns off when the ambient light level has exceeded the defined value. The turn-on and turn-off times are approximately 3 minutes.

DIP switch	Photocell mode
6	
off	Photocell is disabled (light is on all the time) *
on	Photocell controls the light

Stand-alone mode is selected with DIP switches 7 and 8.

DIP switch		Flash rate (FPM)
7	**8**	
off	**off**	**Stand-alone mode**. Modbus (RS-485) is not used for control of the light (but may still be used with configuration tools). *
on	**off**	**Stand-alone mode, Modbus master mode** (light is Modbus Master)
off	on	Modbus slave mode > see chapter 4.3 for usage of DIP switches 1 – 6
on	on	Test mode > see chapter 4.5 for usage of DIP switches 1 – 6

* Factory default

© Obelux Oy 2024

4.3 Modbus slave mode

The configuration DIP switches 1-5 are used to give the light a Modbus address. Duplicate addresses on the same bus are not allowed. Give lights connected to the same communication bus an address starting from address 01. The addresses need to be set from lowest to highest in order. E.g. if 3 devices are used, they need to be in addresses 1, 2 and 3.

DIP switch					Modbus Address
1	2	3	4	5	
on	off	off	off	off	Address 01
off	on	off	off	off	Address 02
on	on	off	off	off	Address 03
off	off	on	off	off	Address 04
on	off	on	off	off	Address 05
off	on	on	off	off	Address 06
on	on	on	off	off	Address 07
off	off	off	on	off	Address 08
on	off	off	on	off	Address 09
off	on	off	on	off	Address 10
on	on	off	on	off	Address 11
off	off	on	on	off	Address 12
on	off	on	on	off	Address 13
off	on	on	on	off	Address 14
on	on	on	on	off	Address 15
off	off	off	off	on	Address 16
on	off	off	off	on	Address 17
off	on	off	off	on	Address 18
on	on	off	off	on	Address 19
off	off	on	off	on	Address 20
on	off	on	off	on	Address 21
off	on	on	off	on	Address 22
on	on	on	off	on	Address 23
off	off	off	on	on	Address 24
on	off	off	on	on	Address 25
off	on	off	on	on	Address 26
on	on	off	on	on	Address 27
off	off	on	on	on	Address 28
on	off	on	on	on	Address 29
off	on	on	on	on	Address 30
on	on	on	on	on	Address 31

In Modbus mode DIP switch 6 is unused.

DIP switch	
6	Reserved

Modbus slave mode is selected with DIP switches 7 and 8 (7 = off, 8 = on).

DIP switch		Flash rate (FPM)
7	8	
off	off	Stand-alone mode. Modbus (RS-485) is not used for control of the light (but may still be used with configuration tools). *
on	off	Stand-alone mode, Modbus master mode (light is Modbus Master)
off	**on**	**Modbus slave mode** > see chapter 4.3 for usage of DIP switches 1 – 6
on	on	Enter test mode > see chapter 4.5 for usage of DIP switches 1 – 6

* Factory default

Note: The RS-485 bus should be terminated with on-board 120 Ohm resistors by turning on the RS-485 termination DIP switch on both ends of the communications bus.

© Obelux Oy 2024

4.4 Modbus master mode (Light operates as Modbus master)

In Master mode, the light can monitor and control a network of lights. The Master light uses its alarm relay if any of the lights has an alarm. Software configuration is required for the Master light.

Any obstruction light can be set as a master of a light network. Only one light shall be the master in the network. The Master light is in Stand-alone mode and broadcasts time and illumination data to slave units via RS-485 / Modbus. Time is typically received from GPS and illumination information comes from photocell. If the information flow from the master unit to slave units is interrupted, the slave units will use local photocell setting and local time in their operations. As the data flow resumes, the slaves automatically synchronize themselves with the master unit.

Chain the lights as shown in section 3.2.5.
Set a light to master mode by switching its DIP switch 7 on. Set DIP switch 7 off in the slave lights to put them to slave mode.

DIP switch 7	Master/Slave mode
off	This device is slave (slaves)
on	This device is master (master)

Set the master light to stand-alone mode and the slave lights to Modbus mode with DIP8.

DIP switch 8	Operating mode
off	Stand-alone (master)
on	Modbus (slaves)

Use configuration DIP switches 1-5 to give the slave lights Modbus addresses. Duplicate addresses on the same bus are not allowed. Give lights connected to the same communication bus an address successively starting from one. RS-485 bus should be terminated with on-board 120 ohm resistors by turning on the RS-485 termination DIP switch on both ends of the communications bus.

In the master light, use Web server interface or light configuration tool to configure the following settings:

► Settings -> Num. Slaves
Set the number of slave lights.
► Settings -> Slave Options
- Transmit Behavior Bits

► Settings -> Slave Behavior
- LI Red Twilight
  Low intensity lights have red light on during Twilight.
- MI Red Twilight
  Medium intensity lights have red light on during Twilight.
- HI Red Twilight
  High intensity lights have red light on during Twilight.
- LI Flash (visible)
  Low intensity lights flash visible light.
- LI Flash (IR)
  Low intensity lights flash infrared light.

► Settings -> Options2
- Transmit FPM (Master mode only)

In the slave lights, use Web server interface or light configuration tool to configure the following settings:

► Settings -> Options2
- Do not use own photocell (will use default ToD, if no master connection)
- Use Default FPM if master connection lost

© Obelux Oy 2024

- Failsafe FPM when no Master connection

Then reset the lights for the settings to take effect.

4.5 Test mode

To enter test mode, set DIP switches 7 and 8 on and all other DIP switches off. The light will enter test mode when power is turned on or after reboot.

DIP switch		Test mode
7	8	
on	**on**	**Enter test mode when power is turned on or after reboot.**

As soon as test mode is entered, DIP switches can be used as follows.

Light mode is selected with DIP switches 1-2. There is normally a delay when changing time-of-day modes (day, twilight and night) based on photocell data. Using accelerated photocell mode will decrease the delay to a minimum.

DIP switch		Light mode
1	2	
off	off	Accelerated photocell light behavior
on	off	RED light only
off	on	IR light only
on	on	Reserved

DIP switch	
3	Reserved

The flashing rate is selected with DIP switches 4-5.

DIP switch		Flash rate (FPM)
4	5	
off	off	Steady
on	off	20
off	on	40
on	on	60

The light can be dimmed by using DIP switches 6-7. Dimming is light brightness as percentage of full power.

Note that the light stays in test mode despite DIP switch 7 is turned off.

DIP switch		Dimming
6	7	
off	off	100%
on	off	30%
off	on	100%
on	on	10%

© Obelux Oy 2024

4.6 Heater operation

All models have an integrated 15W heater element. The heater turns on when the lights internal temperature drops below 10°C and reaches 100% operation when temperature drops below 5°C. The heater turns off after the temperature rises above 10°C.
In cold climates, the heater is meant to evaporate moisture and keep the light thawed from snow and ice. Low-intensity lights power consumption is very low and it doesn't produce a lot of heat, so in cold and damp conditions using the heater is recommended. The heater is beneficial to keep the light operating more reliably.

4.7 Smart heater (DC models)

Smart heater means that the heater can be programmatically set ON/OFF based on light's input voltage.

- Monitors light's input voltage and turns off the heater if the input voltage falls below a configured value
- Software and thermostat controlled, the heater is OFF if temperature is above 10 °C
- Heater must be set on with configuration DIP switch 6
- Smart heater configurable via RS-485 (Modbus) and programming terminals and configuration software on a computer.
- Settable threshold voltage in which the heater will be disabled.
  The voltage is set slightly below battery's charging voltage. The charging voltage depends on the types of battery and charger.
  Recommendation: Set the heater threshold voltage 1V below battery charging voltage (with 24V battery)
  Example: 24V battery, battery charging voltage 27.5V, set the threshold voltage to 26.5V
- Heater off during battery discharge enables longer power on time for the light
- Factory setting: Heater is in use, Smart heater is not in use

4.8 Programming terminal

Light software and configuration settings are upgradable via programming terminal or RS-485 (Modbus) terminal. The programming terminal is used in lights that don't have the Modbus option. Setting a flash rate, photocell threshold and special flash sequences are possible, e.g. Morse code. Updates can be made either with a RS-485 configuration cable (Part code: CONFIG01-RS-485) via RS-485 port by or with a RS-232 configuration cable (Part code: CONFIG01-RXTX) via the programming terminal. The configuration cables connect to a computer via USB. Obelux light configuration tool software in the computer establishes a connection to the light and makes the updates.

4.9 Causes for ALARM

The following events can cause an ALARM:

- Internal hardware or power failure.
- Light source failure, including decreased intensity level below rated level of light.
- Loss of GPS synchronization signal or GPS module failure.
- Incorrect photocell operation.

The ALARM LED will turn on and ALARM relay will activate.

© Obelux Oy 2024

4.10 On-board LEDs

Status indication LEDs are located on the controller board. Some of the status indicators have three operating states (off, on and flashing). The lights have three status LEDs on the controller board. These status LEDs are visible only when service access hatch is open, except the ALARM LED that can be seen through the glass cover.

LED	Description
POWER	**Internal operating voltage (GREEN)** LED OFF: Power off LED ON: Power on
COM	**Communication (GREEN)** LED OFF: Waiting for external signals LED FLASHING: Master-slave communications occurring on the network
ALARM	**Alarm indicator (RED)** LED OFF: Normal operation, no alarms LED ON: Active alarm condition

4.11 GPS operation

In stand-alone mode, lights will automatically synchronize their flashing with their built-in GPS module. After light start-up, it will take some time for the light to acquire a GPS lock, because the lights need a signal from multiple GPS satellites. The GPS provides same timing information for all the lights, so they will flash in sync.

4.12 Troubleshooting

The light doesn´t start

- No power (check that the POWER status LED is illuminated).
- Incorrect configuration (check DIP switches, make sure Test mode is turned off).
- Loose wires (check that all wires are properly seated in terminal block connectors).
- Do not exceed maximum operating voltage. Mains power supply input is protected with overvoltage protection circuit that is tuned to stated operating voltage range.

No Modbus data connection to Obelux controller

- Check DIP switch settings. Check that light has a correct Modbus address and that there are no conflicting addresses. Make sure the light is configured to Modbus mode (DIP switch 8).
- Too many RS-485 termination resistors (120 ohm) on the same RS-485 communication bus. Only the last light on the bus should have the termination resistor in use.
- Check Modbus data wiring.

Light does not change modes between day, twilight and night

- Check that the photocell has an uninterrupted view of the sky.
- Check that there are no external light sources that interfere with the photocell.
- Photocell is sampled once in a minute and read values are averaged to avoid sudden state changes. Unless test mode is enabled, it takes approx. three (3) minutes to change system state between day, twilight and night.

Light does not flash in sync

- GPS antenna is mounted on top of obstruction light's PCB under the glass cover. Antenna needs a non-blocked view to GPS satellites in orbit. After start-up, GPS receiver may take up to 30 mins to obtain correct time data from GPS satellites. This operation requires data from several GPS satellites.

© Obelux Oy 2024

4.13 Spare parts

Part code	Description
SP-MICMP-CTRL	Replacement main control board
SP-MICMP-PSUAC	Replacement power supply unit (100-240VAC)
SP-MICMP-PSUDC12	Replacement power supply unit (10-20VDC)
SP-MICMP-PSUDC24	Replacement power supply unit (20-60VDC)
SP-MICMP-GC	Replacement glass cover including gaskets
CONFIG01-RXTX	configuration RS-232 cable Cable usages: special flash settings, photocell threshold, Smart heater and Master – Slave functionality through programming terminal
CONFIG01-RS-485	configuration RS-485 cable (Modbus) Cable usages: special flash settings, photocell threshold, Smart heater and Master – Slave functionality

© Obelux Oy 2024