OBELUX MID SERIES

Medium-intensity aviation obstruction light

Manual - Obelux MID series

Version 1.8

© Obelux Oy 2018

CONTENTS

1 CHANGE LOG 3

2 ABOUT THIS DOCUMENT 4

3 ABOUT THIS PRODUCT 5

3.1 VERSIONS 6

4 SAFETY INSTRUCTIONS 7

4.1 GENERAL CONSIDERATIONS 7
4.2 ENVIRONMENTAL CONSIDERATIONS 7
4.3 PERSONAL CONSIDERATIONS 7

5 INSTALLATION 8

5.1 DEVICE INSTALLATION 8
5.2 WIRING 8
5.2.1 Mains input (ACW versions and L865-MX-GA) 11
5.2.2 Mains output (ACW versions) 11
5.2.3 DC input (DC versions) 12
5.2.4 DC output (DC versions) 12
5.2.5 Alarm Relay Output 12
5.2.6 RS485 input (not available with L865-MX-GA) 12

6 CONFIGURATION 13

6.1 STAND-ALONE MODE 14
6.2 MODBUS MODE 16
6.3 TEST MODE 17
6.4 L865-MX-GA CONFIGURATION 17

7 OPERATION 18

7.1 STAND-ALONE OPERATION 18
7.2 MODBUS OPERATION 18
7.3 HEATER OPERATION 18
7.4 CAUSES FOR ALARM 18
7.5 ONBOARD LEDS 19
7.6 TROUBLESHOOTING 20
7.7 SPARE PARTS 20
7.8 PACKAGING DETAILS 20

8 MAINTENANCE 21

8.1 UPDATING DEVICE SOFTWARE 21
8.2 REPLACING THE GLASS COVER 23
8.3 REPLACING MAIN CIRCUIT BOARD 25

© Obelux Oy 2018

1 CHANGE LOG

Version	Date:	Description:	Author
0.1	24.10.2016	Document created	AHa
0.9	16.12.2016	Document draft released for internal review	AHa
1.0	23.12.2016	Document release	AHa
1.1	2.1.2017	New RED flashing mode added	AHa
1.2	23.03.2017	Troubleshooting, Spare parts, Packaging, DC models added.	AHa
1.3	12.4.2017	FAA light version added	AHa
1.4	12.7.2017	Installation chapter improved. Added pictures.	AHa
1.5	06.10.2017	GPS lock indicator LED functionality revised. Mistake on page 14 table corrected. Photocell limits added for time of day changes.	AHa
1.6	15.11.2017	Maintenance chapter and L865-MX-GA added	AHa
1.7	25.05.2018	Mistake in measurement drawing corrected. Wrong reference on p16. corrected	AHa
1.8	19.09.2018	Heater operation chapter added	AHa

© Obelux Oy 2018

2 ABOUT THIS DOCUMENT

This document describes the installation and setup of the MID series light head unit, DIP switch effects and operation of the unit on practical level.

CP	Control Panel
FPM	Flashes Per Minute

Table 1: Acronyms and Abbreviations

© Obelux Oy 2018

3 ABOUT THIS PRODUCT

Obelux MID series obstruction lights provide 20 000cd (Medium-Intensity Type A) WHITE and 2000cd RED (Medium-Intensity Type B/C) light. MIWES series lights provide 20 000cd (Medium-Intensity Type A) WHITE and 170cd RED (W, rot ES) light. Some models also feature Night Vision Goggle (NVG) compliant infrared light (850nm).

The MID series lights support both Stand-alone and Modbus operation. In Stand-alone mode, no external controllers are required to run the product. In most use cases, mounting the standalone aviation obstruction light and connecting power supply cable are the only actions needed to operate. In Modbus operation, the light is controlled with a Obelux controller as a part of an aviation light system.

The models come with built-in photocell that can drive the transitions between day, twilight and night modes. The light operation is based on an embedded microcontroller on the light main circuit board.

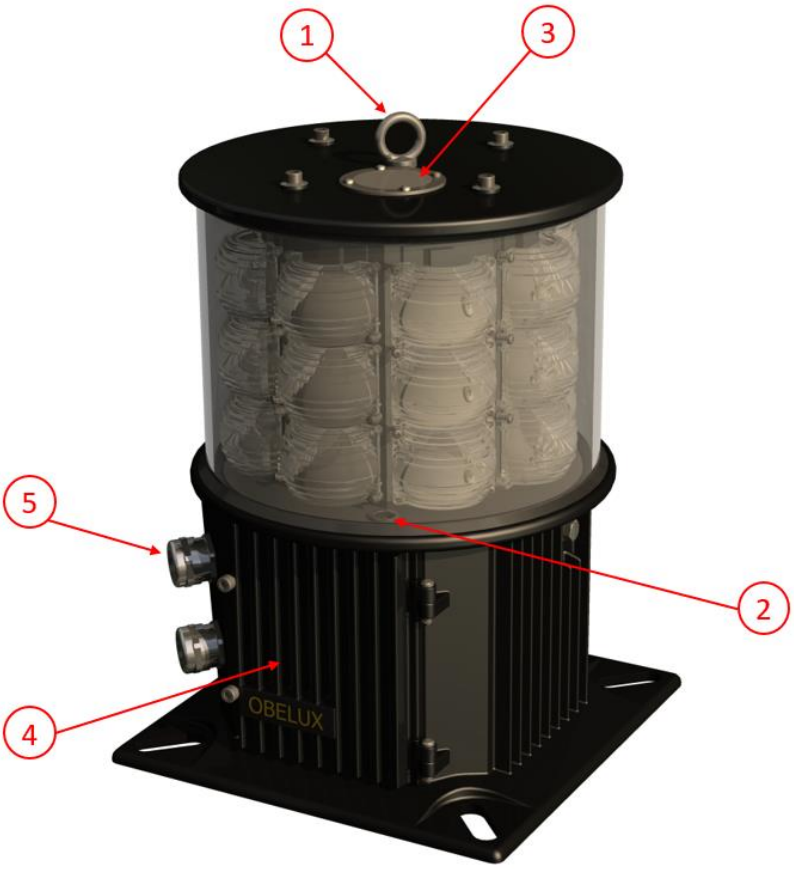

Figure 1: Main functional parts of light head

1. Lug (for lifting the light)
2. Spirit level (for levelling the light during installation)
3. Location of photocell
4. Service access hatch
5. Cable glands

© Obelux Oy 2018

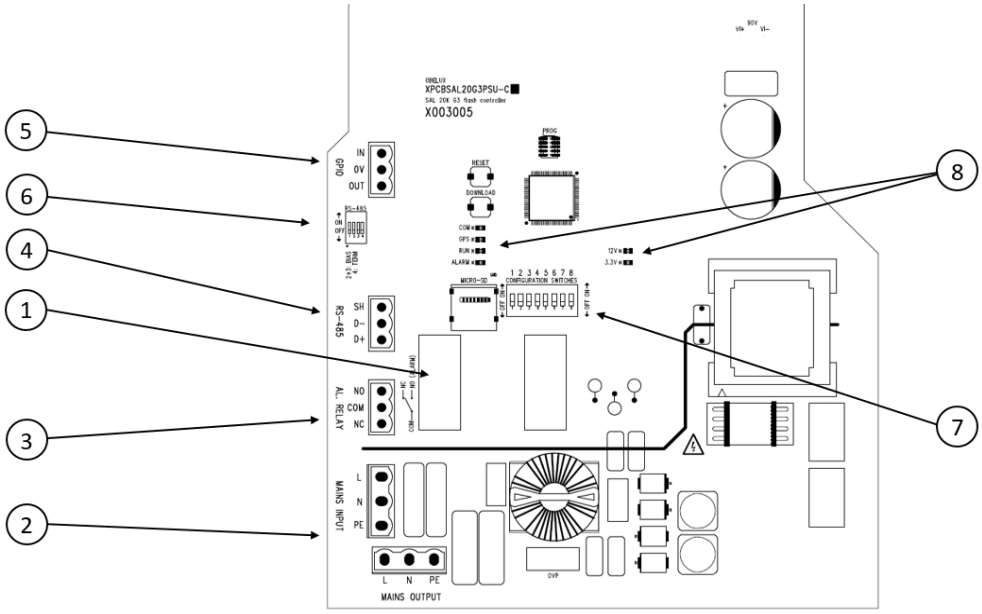

Figure 2: Main circuit board of the light head

1. Software version label
2. Mains power supply connectors
3. Alarm relay connector
4. Communications network connector (RS-485)
5. External signal input connector (GPIO)
6. RS485 termination DIP switches (DIP4)
7. Configuration DIP switches (1-8)
8. Status LEDs

3.1 Versions

Obelux MID series is available as the following models:

Order code	Output	Op. volt.	GPS synch	Infrared	CCV*	Packing dimensions
MID-ACWGAM	20 000cd	90-265VAC	Yes	No	No	460x330x330mm, 15,5kg
MID-ACWIRGAM	20 000cd	90-265VAC	Yes	Yes	No	460x330x330mm, 15,5kg
MID-ACWCCVGAM	20 000cd	90-265VAC	Yes	No	Yes	460x330x330mm, 15,5kg
MID-ACWCCVIRGAM	20 000cd	90-265VAC	Yes	Yes	Yes	460x330x330mm, 15,5kg
MIWES-ACWGAM	20 000cd	90-265VAC	Yes	No	No	460x330x330mm, 15,5kg
MIWES-ACWIRGAM	20 000cd	90-265VAC	Yes	Yes	No	460x330x330mm, 15,5kg
MID-DCGAM	20 000cd	20-60VDC	Yes	No	No	460x330x330mm, 15,5kg
MID-DCIRGAM	20 000cd	20-60VDC	Yes	Yes	No	460x330x330mm, 15,5kg
MID-DCCCVGAM	20 000cd	20-60VDC	Yes	No	Yes	460x330x330mm, 15,5kg
MID-DCCCVIRGAM	20 000cd	20-60VDC	Yes	Yes	Yes	460x330x330mm, 15,5kg
MID-FAA-ACWGAM	20 000cd	90-265VAC	Yes	No	No	460x330x330mm, 15,5kg
L865-MX-GA	20 000cd	90-265VAC	Yes	No	No	460x330x330mm, 15,5kg

*Cold Climate Version

© Obelux Oy 2018

4 SAFETY INSTRUCTIONS

In this section, you will find general safety instruction for the device. Please read the instructions carefully before installing or using the device to avoid any personal, environmental or material damages.

4.1 General considerations

Install device observing manufactures installation guide

Use only cables and connectors specified by the manufacturer

Keep your device away from heat sources, dust, smoke or other harmful substances

Do not add or remove any components inside the device unless otherwise approved by the manufacturer

Do not spill food or other liquids on device

If you have any error situation with the device, do not try to fix it by yourself, contact your reseller.

4.2 Environmental considerations

The European Parliament and the Council of European Union issued directive 2012/19/EU to contribute to sustainable production and consumption by, as a first priority, the prevention of WEEE and, in addition, by the re-use, recycling and other forms of recovery of such wastes so as to reduce the disposal of waste and to contribute to the efficient use of resources and the retrieval of valuable secondary raw materials.

Obelux aviation obstacle light products sold inside European Union can be returned to manufacturer if no local WEEE separate collection and re-use services are available. Please contact Obelux for details.

Obelux does not refurbish returned items but forwards them to authorized WEEE treatment facility.

4.3 Personal considerations

HIGH VOLTAGE! Device contains high voltage which is very dangerous to human beings. Any direct contact to high voltage could lead to serious injury, worst case even death.

© Obelux Oy 2018

5 INSTALLATION

5.1 Device installation

Mount the obstruction light to selected mounting point using quality-made fasteners. This aviation obstruction light comes with four bolt holes to mount this product securely. One of the mounting points is not painted. This mounting point can be used as additional grounding. Level the light using spirit level (bubble level) if the mounting point is not already levelled. Tighten bolts & nuts. Obelux recommends 100 Nm tightening torque for M12 hot-dipped 8.8 bolts with suitable washer between bolt and mounting plate. When the service access hatch (door) is open, check that there is no inflow of water (incl. hail and snow) into aviation obstacle light. Photocell is located on top of the light. Photocell should have an uninterrupted view of the sky to work correctly. All dimensions are in millimetres (mm).

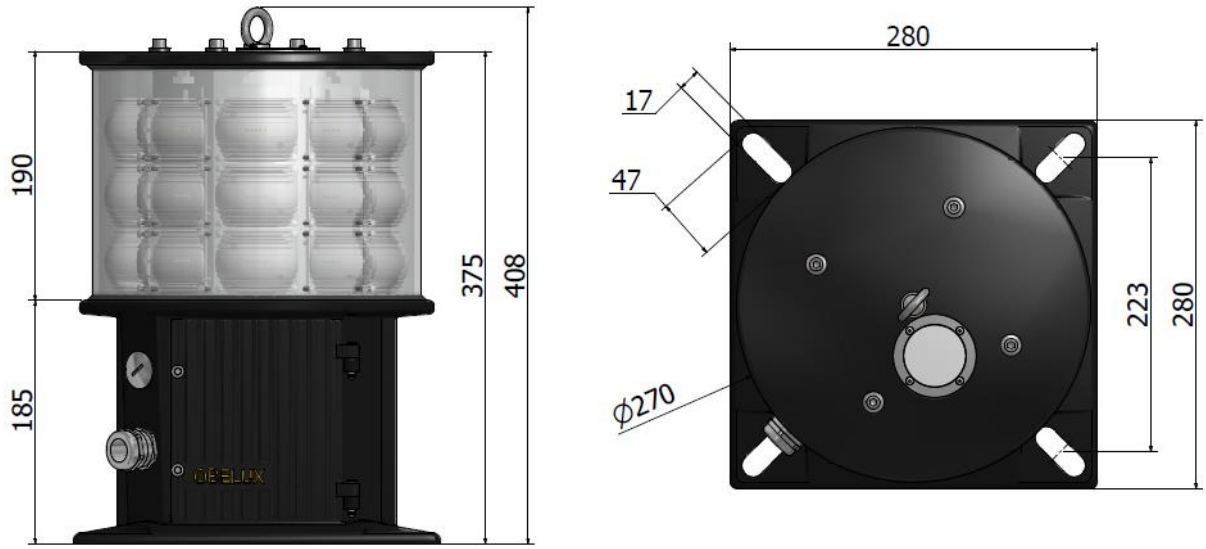

Figure 3: Dimensions

5.2 Wiring

Route cables using cable glands on side of the light head. Connect the cable wires securely to appropriate terminal block connectors. Connectors can be disconnected from the terminals on the main circuit board for easier access. Second row of terminals in the Alarm relay / RS485 connector can be used to distribute alarm and data signals to next light head.

Mains Power **Alarm relay / RS485 data**

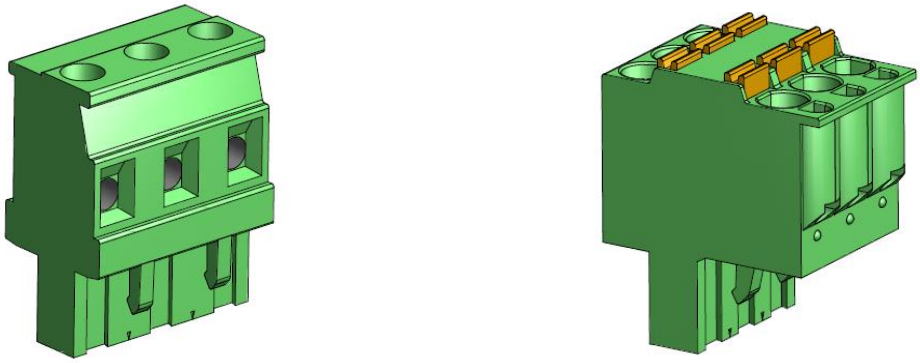

Figure 4: Terminal block connector

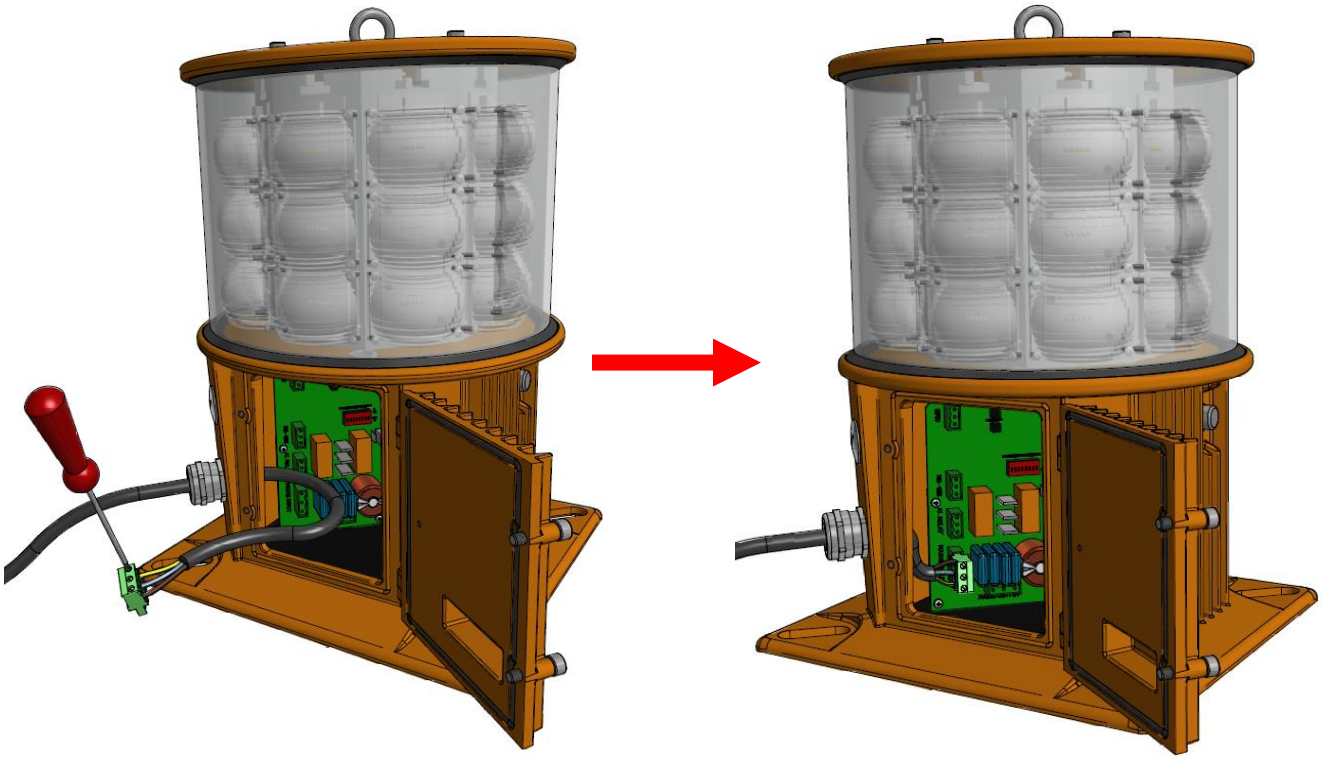

Figure 5: Wiring the Mains Input

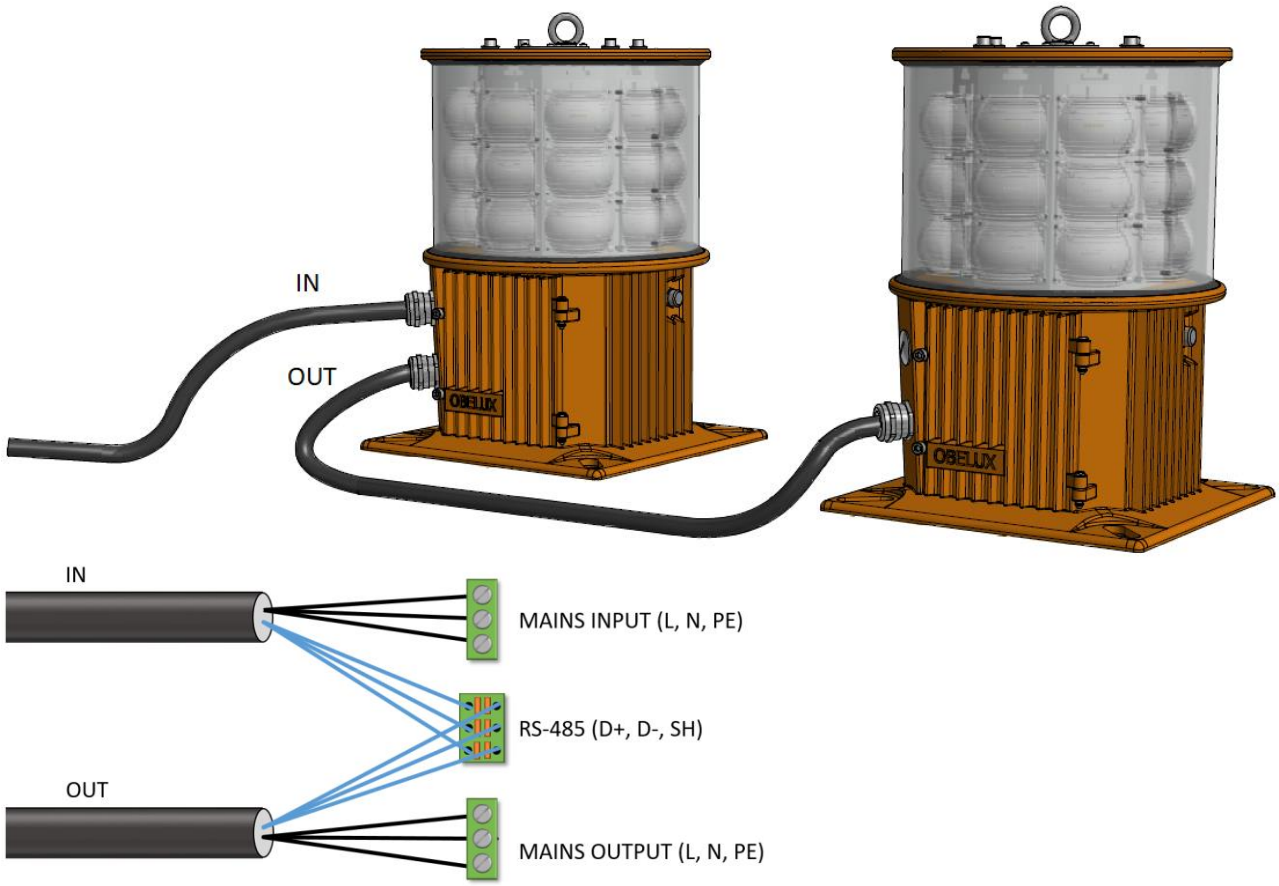

Figure 6: Distributing power and data to next light head

Make sure that all unused glands or gland holes are sealed. There are two cable glands on the device. Follow the illustration below to achieve desired EMC protection with the EMC glands:

Cable gland M25 for 11-16 mm cable diameter

Please follow these instructions when routing cable via a cable gland:

1. Partially expose the braided screen by removing the outer sheath of the cable at a length of approx. 10 mm.
2. Insert the cable through the dome nut and the gland body until the contact spring is pressed against the braided screen.
3. Firmly screw on dome nut.

© Obelux Oy 2018

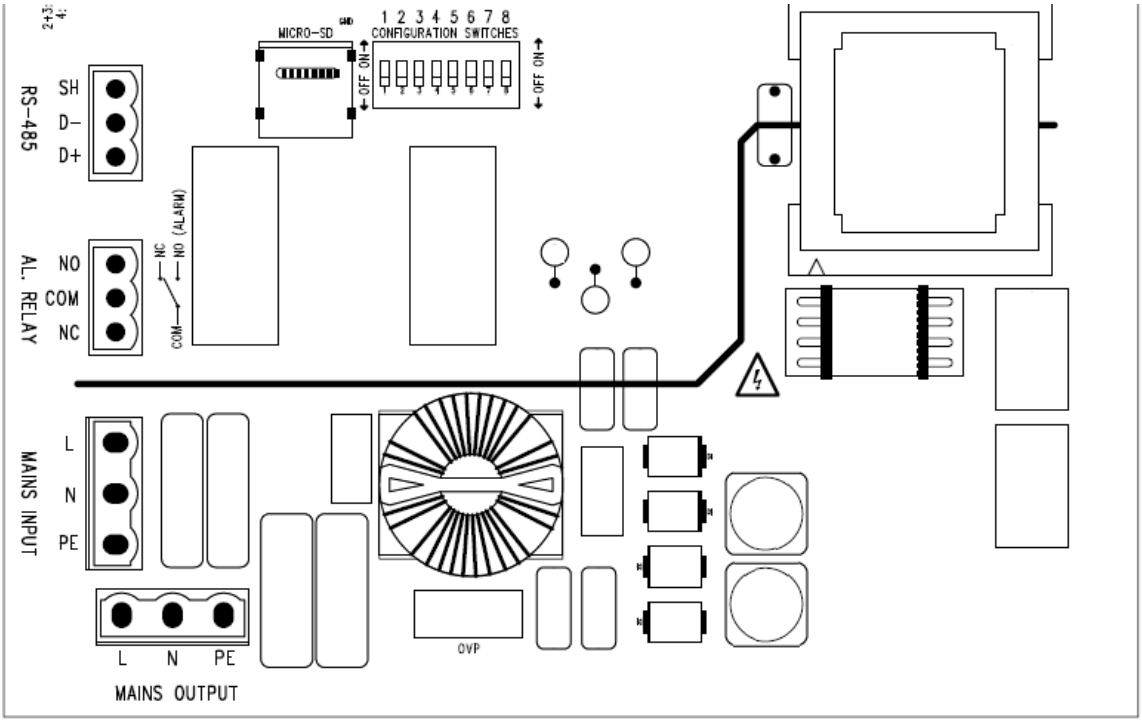

Figure 7: Light head terminals

5.2.1 Mains input (ACW versions and L865-MX-GA)

Mark	Description	Information
L	Live terminal	Connect the mains power supply in into these screw connectors. Colours are typically brown (for Live) and blue (for Neutral)
N	Neutral terminal	
PE	Protective earth	Connect protective earth into this screw connector. PE line is typically indicated with yellow/green shield on the wire.

Single-phase supply with Protective Earth. Tighten the connector screws using flat-head (straight) screwdriver.

Conductor cross-section 0.2mm² - 2.5mm²

5.2.2 Mains output (ACW versions)

Mark	Description	Information
L	Live terminal	Connect the mains power supply in into these screw connectors. Colours are typically brown (for Live) and blue (for Neutral)
N	Neutral terminal	
PE	Protective earth	Connect protective earth into this screw connector. PE line is typically indicated with yellow/green shield on the wire.

This terminal is used to distribute power from the light head to the next. Tighten the connector screws using flat-head (straight) screwdriver.

Conductor cross-section 0.2mm² - 2.5mm²

© Obelux Oy 2018

5.2.3 DC input (DC versions)

Mark	Description	Information
+	Positive	Power supply input positive
-	Negative	Power supply input negative
GND	Ground	Protective earth

Tighten the connector screws using flat-head (straight) screwdriver.

Conductor cross-section 0.2mm² - 2.5mm²

5.2.4 DC output (DC versions)

Mark	Description	Information
+	Positive	Power supply output positive
-	Negative	Power supply output negative
GND	Ground	Protective earth

This terminal is used to distribute power from the light head to the next. Tighten the connector screws using flat-head (straight) screwdriver.

Conductor cross-section 0.2mm² - 2.5mm²

5.2.5 Alarm Relay Output

Mark	Description	Information
NO	Normally Open	In alarm, connected with COM
COM	Common	Common relay contact
NC	Normally Connected	During normal operations, connected with COM

Unused alarm relay connectors can be left floating i.e. no wiring there is required. Push-in spring connection.

Conductor cross-section 0.2mm² - 2.5mm²

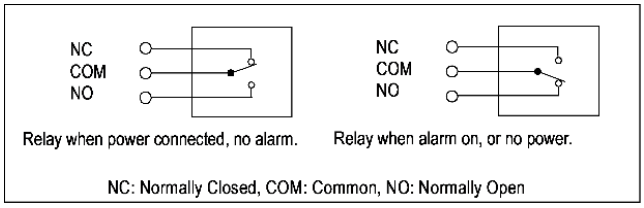

5.2.6 RS485 input (not available with L865-MX-GA)

Mark	Description	Information
D+	Data +	RS485 non-inverting pin
D-	Data -	RS485 inverting pin
SH	Shield	Shield

The RS-485 network (bus) input. Push-in spring connection.

Conductor cross-section 0.2mm² - 2.5mm²

© Obelux Oy 2018

6 CONFIGURATION

Open the two screws that secure the service access door to the chassis using a hex key. Using the DIP switches visible and accessible via service access opening, configure the desired parameters into the light. DIP switches are numbered 1-8, the lowest number (1) being on the leftmost edge of the red/white DIP switch block looked from service access door. Embedded software in the obstruction light reads configuration switches regularly. Configuration change becomes effective within few seconds.

The light can be configured between two different operating modes. Reset is needed when changing between Stand-alone mode and Modbus mode. Configuring L865-MX-GA light is covered in chapter 6.4.

Stand-alone mode: In this mode, the light operation is configured with DIP switches. No additional controllers are needed.

Modbus mode: In this mode, the light is being controlled with an additional Obelux controller.

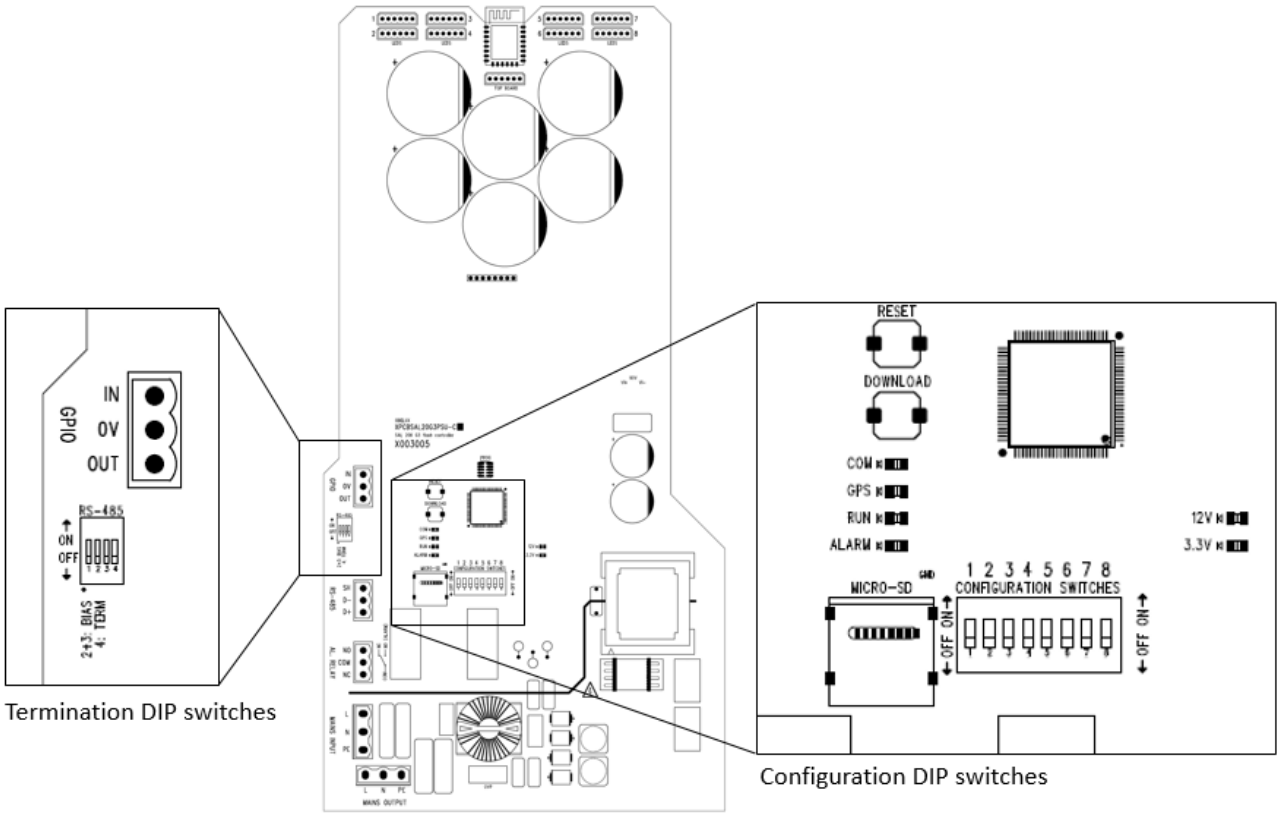

Figure 8: Location of the DIP switches

6.1 Stand-alone mode

The light is in stand-alone mode when the DIP 8 is off.

DIP switch		Stand-alone (A) or Modbus (M)
8		
off		Stand-alone (A)
on		Modbus (M)

Flashing mode of light is selected with DIPs 1-3. Configuring L865-MX-GA light is covered in chapter 6.4. All MID, MIWES and MID-FAA series lights don´t have infrared light included. Using IR configuration in a non-IR light will give an unnecessary alarm. Photocell light limit for the day mode is 1600lux and 157lux for the night mode unless specified otherwise.

MID series lights are configured with the following DIP settings. Flash pulse length in day and twilight mode is 100ms. Flash pulse length for the RED can be selected as 50% (50:50) of the selected flash rate or to fixed 200ms.

DIP switch			Light Type (MID series)	
1	2	3	Day / Twilight	Night
off	off	off	20 000cd white (flashing)	2 000cd white (flashing)
on	off	off	20 000cd white (flashing)	2 000cd red, 50:50
off	on	off	20 000cd white (flashing)	2000cd white and infrared (flashing)
on	on	off	20 000cd white (flashing)	2 000cd red and infrared, 50:50
off	off	on	20 000cd white (flashing)	2 000cd red, 200ms
on	off	on	20 000cd white (flashing)	2 000cd red and infrared, 200ms
off	on	on	Reserved (if selected, the light will be OFF)	
on	on	on	Reserved (if selected, the light will be OFF)	

MIWES series lights are configured with the following DIP settings. Flash pulse length in day and twilight mode is 100ms. In night mode MIWES series lights flash with the following WROT sequence 1s on - 0.5s off - 1s on - 1.5s off.

DIP switch			Light Type (MIWES series)	
1	2		Day / Twilight	Night
off	off		20 000cd white (flashing)	170cd red (WROT)
on	off		20 000cd white (flashing)	170cd red (WROT) and infrared
off	on		Reserved (if selected, the light will be OFF)	
on	on		Reserved (if selected, the light will be OFF)	

MID-FAA series lights are configured with the following DIP settings. Flash pulse length in day and twilight mode is 100ms. Flash pulse length for the RED can be selected as 50% (50:50) of the selected flash rate or to fixed 200ms.

DIP switch			Light Type (MID-FAA series)	
1	2	3	Day / Twilight	Night
off	off	off	20 000cd white (flashing)	2 000cd white (flashing)
on	off	off	20 000cd white (flashing)	2 000cd red, 50:50
off	on	off	20 000cd white (flashing), 645 Lux*	2 000cd white (flashing), 54 Lux*
on	on	off	Day – OFF, 645 Lux* Twilight - 20 000cd white (flashing)	2 000cd white (flashing), 54 Lux*
off	off	on	20 000cd white (flashing)	2 000cd red, 200ms
on	off	on	Reserved (if selected, the light will be OFF)	
off	on	on	Reserved (if selected, the light will be OFF)	
on	on	on	Reserved (if selected, the light will be OFF)	

*Photocell limits for time of day changes (Day 645lux, Night 54lux)

© Obelux Oy 2018

Flashing rate (FPM) in Day, Twilight and Night mode is selected with DIPs 4-5. With MIWES series lights this setting only applies to day and twilight mode.

DIP switch			Flash rate	
4	5			
off	off		20 fpm (flashes per minute)	
on	off		30 fpm	night mode, 54 Lux*
			40 fpm	day and twilight mode, 645 Lux*
off	on		40 fpm	
on	on		60 fpm	

*Photocell limits for time of day changes (Day 645lux, Night 54lux)

In addition, the operating mode of the RED light in night mode is configured with DIP 6. This setting does not affect MIWES series lights.

DIP switch		Night mode operation
6		
off		Red and infrared LEDs flash at selected flash rate
on		Red and infrared LEDs in steady-burning mode

Using DIP switch 7, the obstruction light can be set to operate as master in network. Only one obstruction light shall be master in a network domain. Master unit broadcasts time and illumination data to slave units. Time is typically received from GPS and illumination information comes from photocell. If the information flow from master unit to slave units is interrupted, the slave units will use local photocell setting and local clock (time) in their operations. As data flow resumes, the slaves automatically synchronise themselves with master unit.

DIP switch		Master/Slave mode
7		
off		This device is slave
on		This device is master

RS-485 bus should be terminated with on-board 120 ohm resistors on both ends of this communications bus. Turn on DIP4 on from the termination DIP switches. Location of the termination DIP switches can be seen in Figure 6.

© Obelux Oy 2018

6.2 Modbus mode

The light is in Modbus mode when the DIP 8 is on. Light is being controlled with an Obelux controller.

DIP switch		Stand-alone (A) or Modbus (M)
8		
off		Stand-alone (A)
on		Modbus (M)

Configuration DIP switches 1-4 are used to give the light RS485 bus address. Duplicate addresses on the same bus are not allowed. Give lights connected to the same communication bus an address starting from one.

DIP switch				Modbus Address
1	2	3	4	
on	off	off	off	Address 01
off	on	off	off	Address 02
on	on	off	off	Address 03
off	off	on	off	Address 04
on	off	on	off	Address 05
off	on	on	off	Address 06
on	on	on	off	Address 07
off	off	off	on	Address 08
on	off	off	on	Address 09
off	on	off	on	Address 10
on	on	off	on	Address 11
off	off	on	on	Address 12
on	off	on	on	Address 13
off	on	on	on	Address 14
on	on	on	on	Address 15

RS-485 bus should be terminated with on-board 120 ohm resistors on both ends of this communications bus. Turn on DIP4 on from the termination DIP switches. Location of the termination DIP switches can be seen in Figure 8.

© Obelux Oy 2018

6.3 Test mode

To enter test mode set DIP 7 and DIP 8 on. All other DIPs are set off. The light will enter test mode when power is turned on. To leave test mode turn off DIP 7 and DIP 8 and turn off the power. When power is turned on again the light returns to normal operation.

DIP switch			Test mode
7	8		
on	on		Test mode enabled. All other DIPs are off.

Light mode is selected with DIPs 1-2. There is normally a delay when changing time day modes (day, twilight and night) based on photocell data. Using accelerated photocell mode will decrease the delay to a minimum.

DIP switch			Light mode
1	2		
off	off		Accelerated photocell light behaviour
on	off		WHITE light only
off	on		RED light only
on	on		IR light only
off	off		WROT mode (overrides all FPM except steady)

DIP3 will force all RED and IR light modes to function with WROT flash sequence.

DIP switch		WROT mode
3		
off		WROT mode off
on		WROT mode on (overrides all FPM except steady)

Flashing rate (FPM) is selected with DIPs 4-5.

DIP switch			Flash rate
4	5		
off	off		Steady
on	off		20 fpm (flashes per minute)
off	on		40 fpm
on	on		60fpm

The light can be dimmed with using DIP 6 and DIP 7. Dimming is light brightness as percentage of full power.

DIP switch			Dimming
6	7		
off	off		100%
on	off		30%
off	on		100%
on	on		10%

6.4 L865-MX-GA Configuration

No configuration is needed for L865-MX-GA light. All DIP switches should be in off.

DIP switches	Operation		
	Day (>645lx)	Twilight (645>x>54lx)	Night (<54lx)
all off	OFF	20 000cd white, 40fpm	2 000cd white, 40fpm

© Obelux Oy 2018

7 OPERATION

MID series light can be configured in to two operation modes. These two operation modes are explained in the following chapter.

7.1 Stand-alone operation

In stand-alone operation, the light is configured with the DIP switches. No additional controllers are needed. Light head will use its internal photocell to determine the time of day (day, twilight or night). The light will change its flashing mode based on photocell data and how the user has configured the light. Light heads will synchronize their flashing with the built-in GPS module. After light head start-up, it will take some time for the light head to acquire a GPS lock.

7.2 Modbus operation

In Modbus operation, the light is being controlled with a Obelux controller. If connection is lost the controller the light will keep working on its own. It will use its internal photocell and GPS to synchronize flashing and determine the time of day. The light will return to normal operation when the connection is recovered.

7.3 Heater operation

All MID models have a small integrated 5.5W heater element on the main PWB. The heater starts working when the light internal temperature drops below 10°C. Heater reaches 100% operation when temperature drops below 5°C. Heater stops working after the temperature rises above 10°C.

The cold climate versions (-CCV) have a large 60W heater on back side of the main PWB. The larger heater has the same temperature limits for operation as the smaller heater.

7.4 Causes for ALARM

The following events can cause an ALARM:

- Internal power failure
- Light source failure, including decreased intensity level below rated level of light
- Loss of GPS synchronization signal or GPS module failure
- Incorrect photocell operation

The ALARM led will turn on and ALARM relay will activate.

© Obelux Oy 2018

7.5 Onboard LEDs

Status indication LEDS are located on the controller board. Some of the status indicators have three operating states (off, lit and blinking).

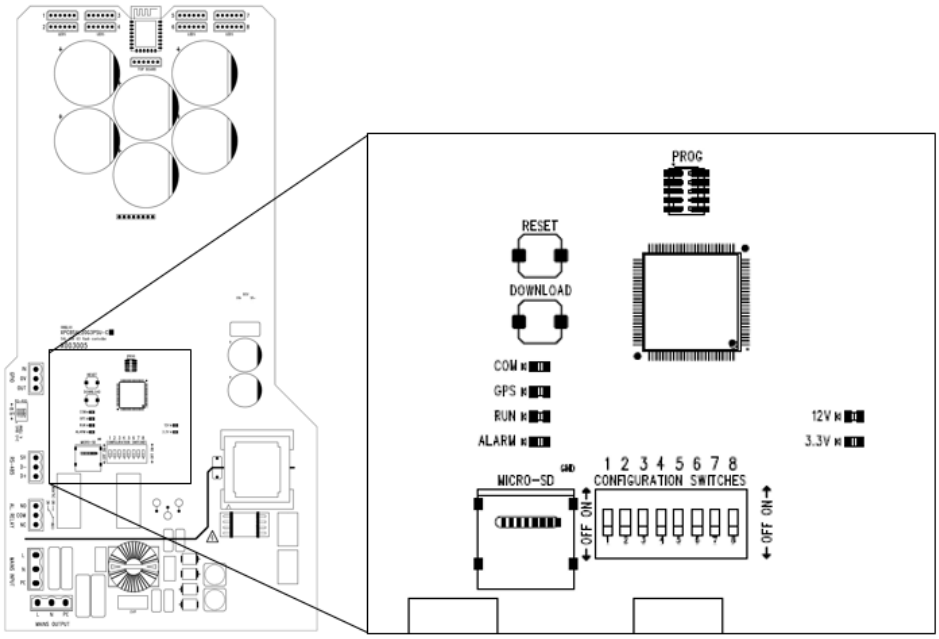

Figure 9: Location of the status LEDs

Obelux MID series lights have five status LEDs on the controller board. These status LEDs are visible only when service access hatch is open.

LED	**Description**
3.3V	**Internal operating voltage (GREEN)** LED OFF: Power off LED ON: Unit is powered on
12V	**Internal operating voltage (GREEN)** LED OFF: Power off LED ON: Unit is powered on
COM	**Communication (GREEN)** LED OFF: Waiting for external signals LED FLASHING: Master-slave communications occurring on the network
GPS	**GPS fix** LED OFF: No GPS fix LED FLASHING: Light GPS module has fix on GPS place and time. Light is not yet fully synchronized. LED ON: Light GPS module has fully resolved the UTC time. It may take several minutes for the GPS module to receive the necessary data.
RUN	**Synchronization (GREEN)** LED OFF: All outputs are off LED ON: At least one output is active. Led is flashing at same time and frequency as the aviation light.
ALARM	**Alarm indicator (RED)** LED OFF: Normal operation, no alarms LED ON: Active alarm condition

© Obelux Oy 2018

7.6 Troubleshooting

The light doesn´t start

- No power (check that the 3V3 status LED is illuminated)
- Incorrect configuration (check DIP switches, make sure Test mode is turned off)
- Loose wires (check that all wires are properly seated in terminal block connectors)
- Do not exceed maximum operating voltage. Mains power supply input is protected with overvoltage protection circuit that is tuned to stated operating voltage range.

No Modbus data connection to Obelux controller

- Check DIP settings. Check that light has a correct Modbus address and that there are no conflicting addresses. Make sure light is configured to Modbus mode (DIP8).
- Too many RS-485 termination resistors (120ohm) on the same RS-485 communication bus. Only the last light on the bus should have the termination resistor in use.
- Check Modbus data wiring

Light does not change modes between day, twilight and night

- Check that the photocell has an uninterrupted view of the sky
- Check that there are no external light sources that interfere with the photocell
- Photocell is sampled once in a minute and read value are averaged to avoid sudden state changes. Unless test mode is enabled, it takes approx. three (3) minutes to change system state between day, twilight and night.

Light does not flash in sync

- GPS antenna is mounted on top of obstruction light. Antenna needs non-blocked view to GPS satellites in orbit. After start-up, GPS receiver may take up to 30min to obtain correct time data from GPS satellites. This operation requires data from several GPS satellites.

7.7 Spare parts

Part code	Description
SSAL20G3PSU	Main board for MID-light
GC-MID17	Glass Cover with gaskets for MID-light

7.8 Packaging details

Box dimension: 33 X 33X 46cm

Weight: 15,50Kg

Box material: Cardboard outer box with extra cushion inside

© Obelux Oy 2018

8 MAINTENANCE

The Obelux obstruction lights are designed to have more than 20 years of maintenance free operating lifetime. The fault monitoring feature will give an alarm signal when the unit requires attention. A yearly visual examination of the products and operation is sufficient.

8.1 Updating device software

To update the device software, a Cyclone programmer unit containing an updated software version is needed. Obelux provides information on what software version to use. If you are unsure about which version to use, consult Obelux before preforming the update.

1. Disconnect power from the light. Programming device will provide power to the light during programming.
2. Connect power to the Cyclone FX programmer

3. Select correct software (*.SAP file) from programmer by pressing **Menu** button and opening **Select Programming Image** menu on the touch screen**.** Select the correct SAP file from the menu.

4. Open the service door on the side of the light head. Connect programmer cable.

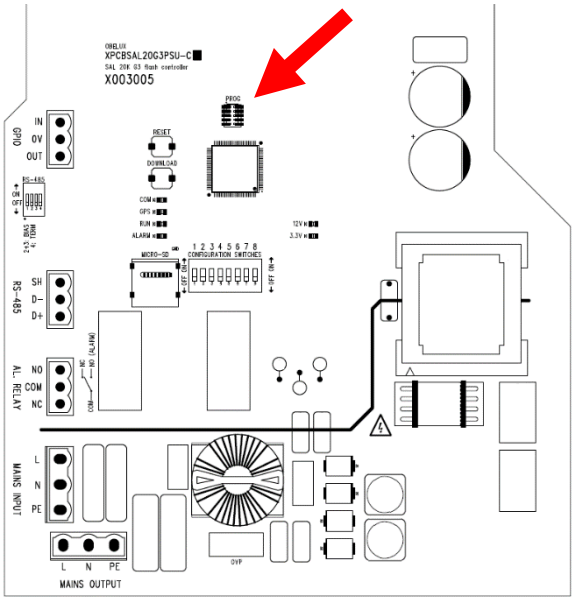

5. Press start button. If programming was successful the green Success LED will turn on.

6. If the RED Error LED turns on the update was not successful. In this case:
   - Disconnect power from the programmer. Re-connect the power to the programmer and press start button again.
   - Turn the programming cable 180 degrees on the Cyclone programmer
     (It is difficult to say what is the correct cable orientation because it depends on which way the cable is connected on the programming device)

7. Disconnect programming cable from the light and turn on power. Verify that the unit starts up successfully.
8. Put a new software version sticker on the circuit board. Verify that information presented on this sticker matches the application image just loaded.

8.2 Replacing the glass cover

This section contains instructions for replacing a broken glass.

1. Disconnect power supply to the light head.
2. Open all four M6x20 stainless steel bolts on the top plate using a hex key 5.

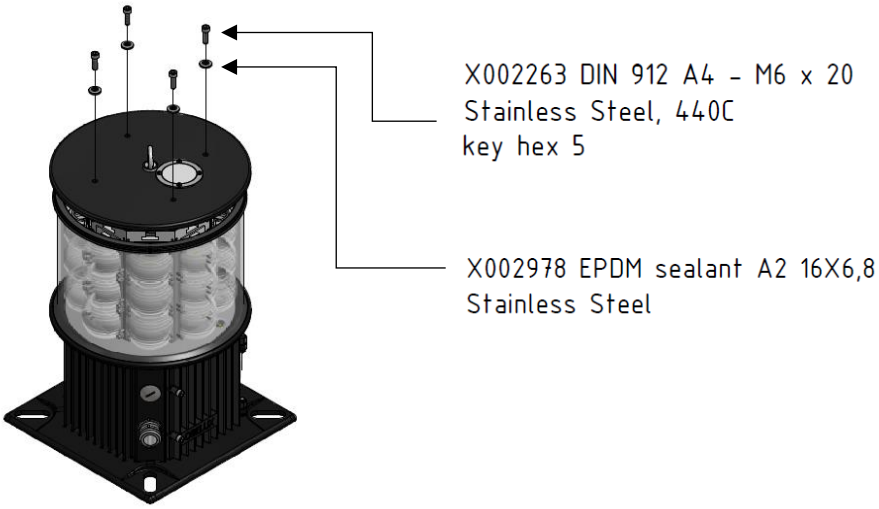

3. When lifting the top lid make sure you disconnect the GPS antenna cable from the light head circuit board.

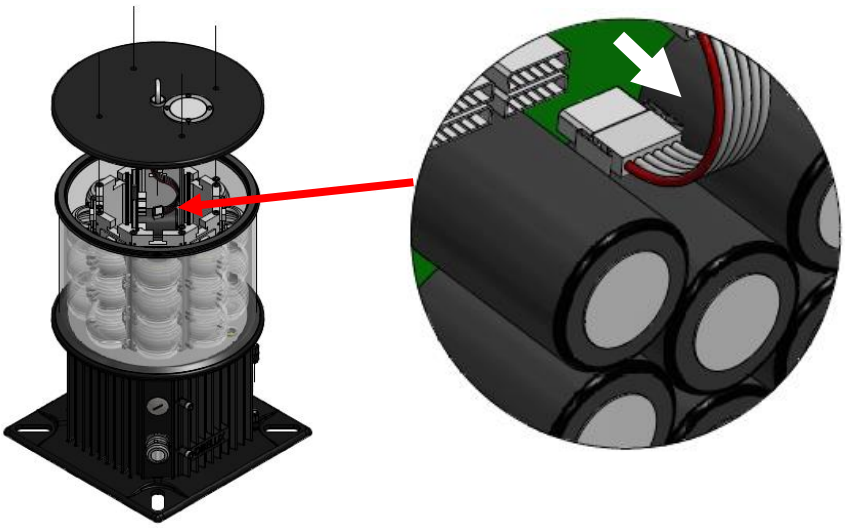

4. Check that you don´t lose the four O-rings that are between the chassis and the lid.

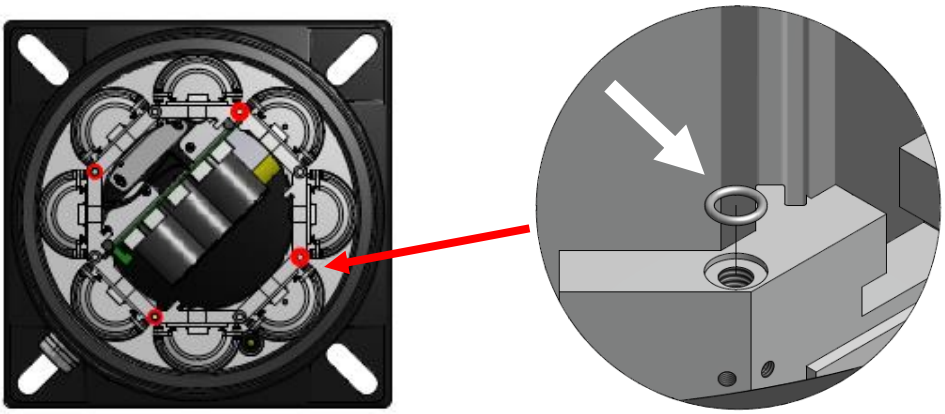

5. Lift the glass carefully off the light head. Remove the seals from the old glass and move both of them to the new glass.

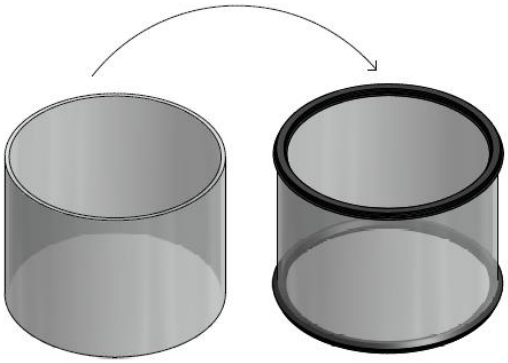

6. Place the new glass with the seals back in its place on the light head. Check that the seal is properly seated.

7. Check that the four rubber O-rings on the chassis are in place.

8. Connect the GPS antenna cable of the lid back to the light main circuit board (connector name Top Board). After this twist the lid three full turns before putting it back to its position on the light head chassis. This is done so that the GPS antenna cable doesn´t get caught between the lid and the light head chassis.

   Align the four lid screw holes with the four O-rings on the chassis.

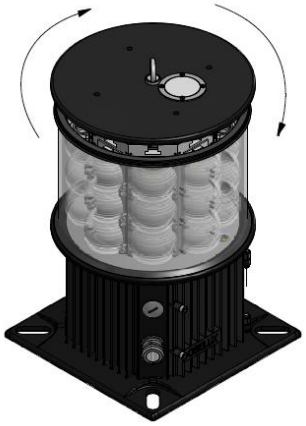

9. Screw the four hexagon-socket-head bolts back with the washers. Re-check that all the glass seals are still properly seated.

10. Connect power and verify that the unit starts up successfully.

8.3 Replacing main circuit board

This section contains instructions for replacing a main circuit board.

1. Disconnect power supply to the light head.
2. Open all four M6x20 stainless steel bolts on the top plate using a hex key 5.

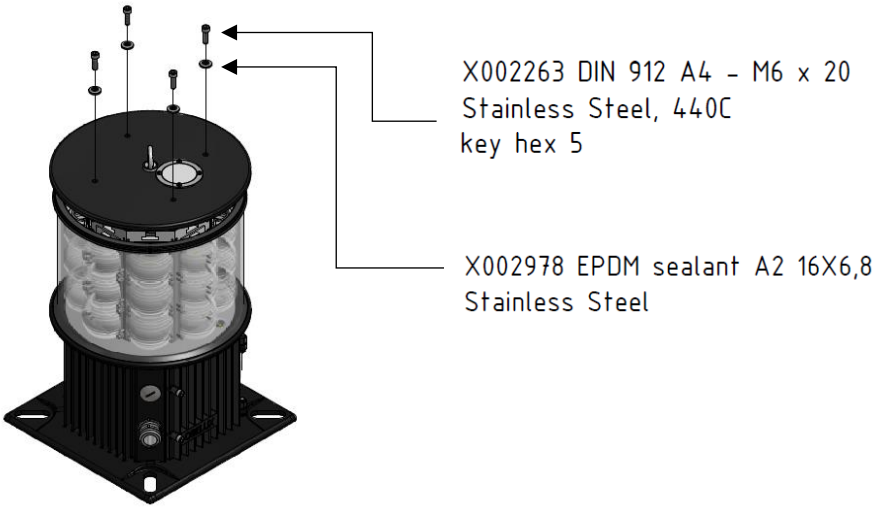

3. When lifting the top lid make sure you disconnect the GPS antenna cable from the light head circuit board.

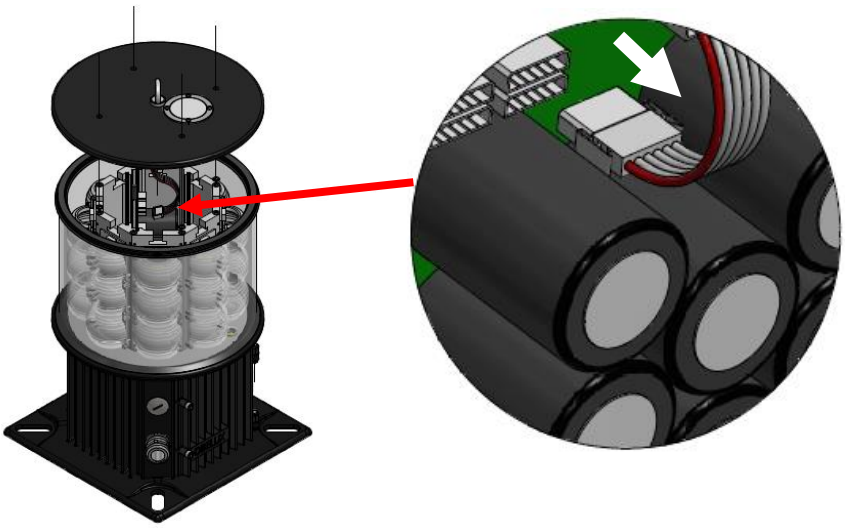

4. Remove the four O-rings that are between the chassis and the lid.

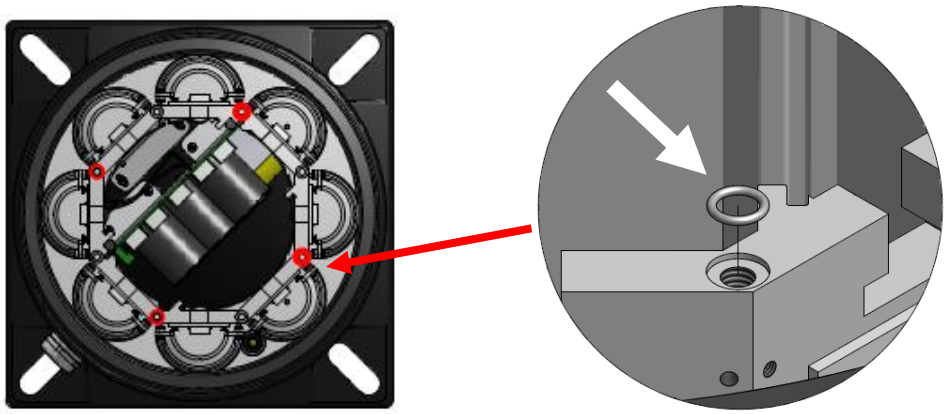

5. Lift the glass carefully off the light head.

6. Remove rubber bars holding the main circuit board in place.

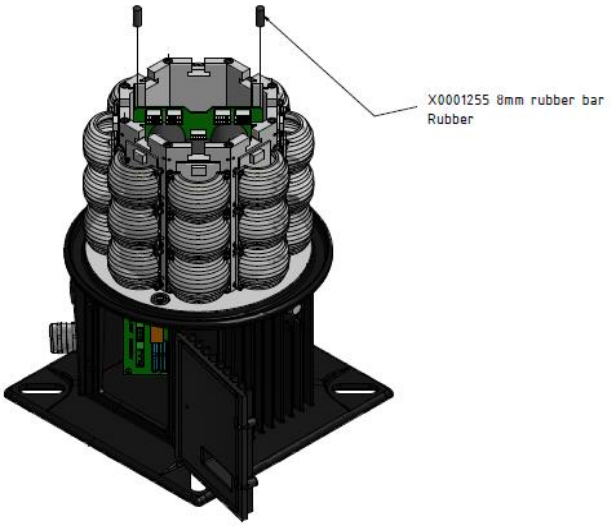

7. Disconnect LED wires from the main circuit board. Disconnect the earth connector (green/yellow wire) from main circuit board. You can access the earth wire through the service door.

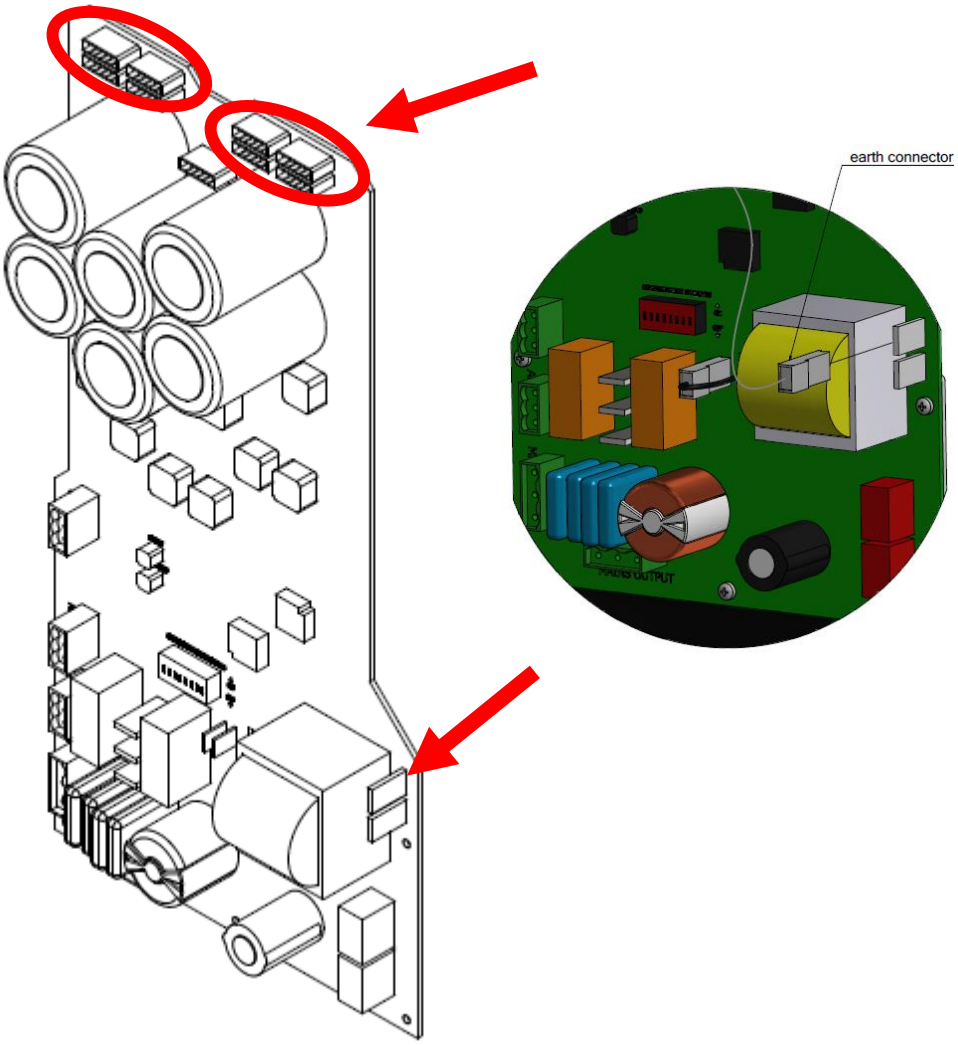

8. Open the four screws from the bottom of the light head and pull the bottom plate assembly out of the light head.

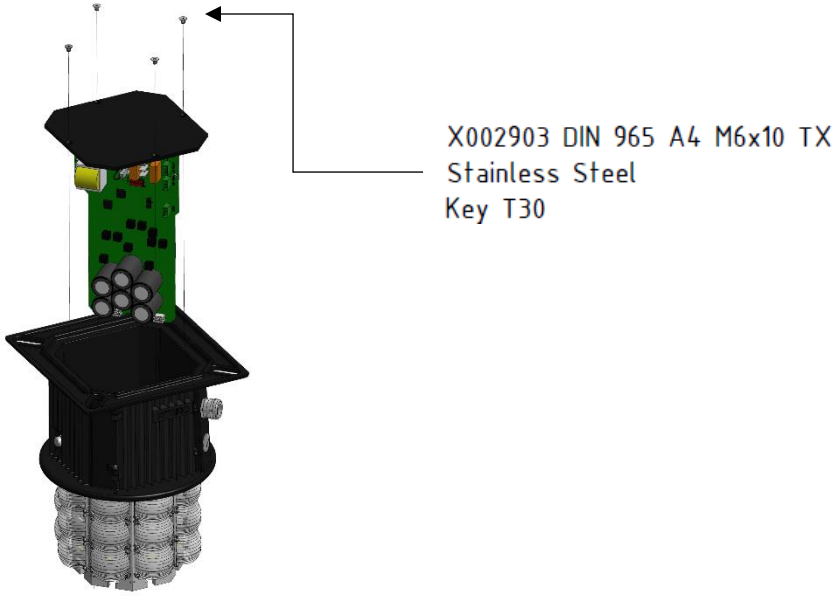

9. Disconnect the heater cable from the main circuit board. This applies only for light heads with heater option (CCV).

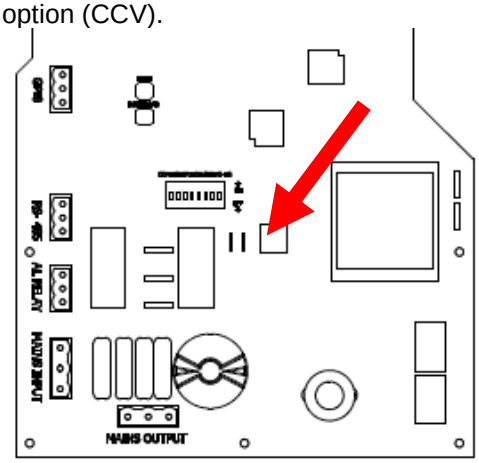

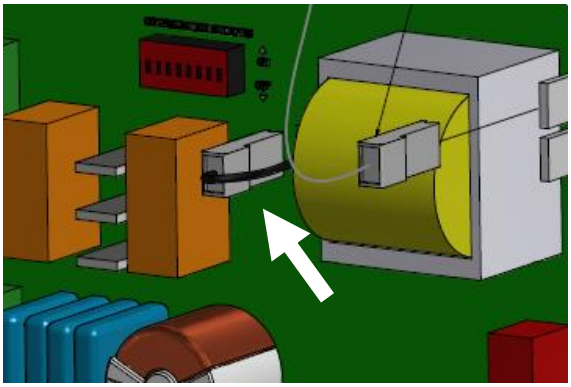

10. Open the four screws holding the main circuit board on the bottom plate assembly. Replace the old circuit board with the new circuit board and re-attach the heater cable.

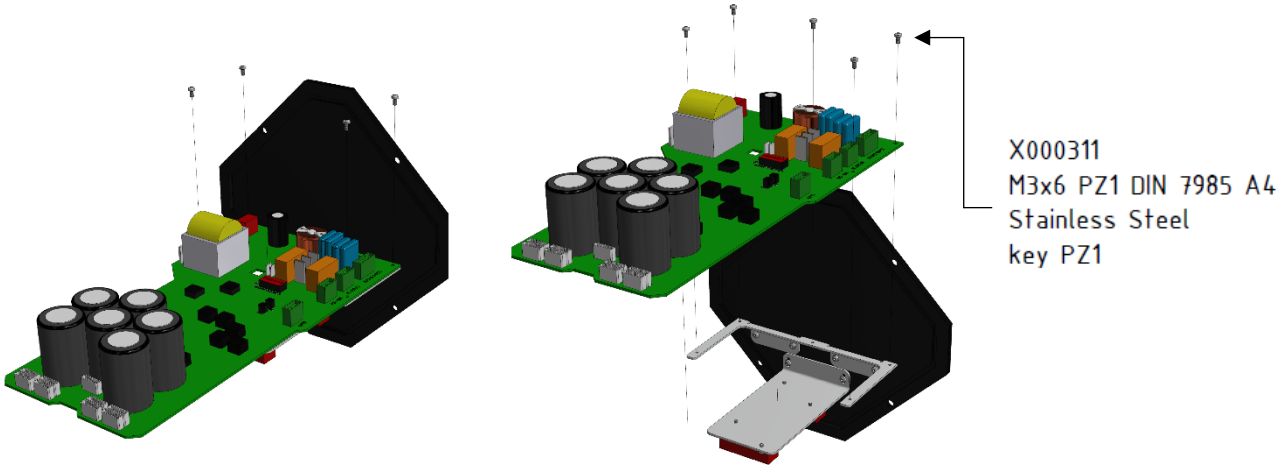

11. Push the bottom place assembly back to the light head and attach the bottom screws.

12. Push the rubber bars back in place.

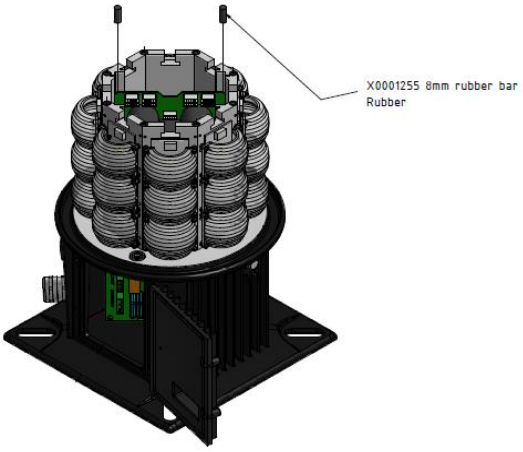

13. Connect the earth connector and LED wires. It does not matter which LED wire is connected to which LED connector.

14. Place the new glass with the seals back in its place on the light head. Check that the seal is properly seated.

15. Put the four rubber O-rings back in place.

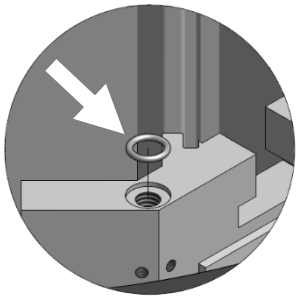

16. Connect the GPS antenna cable of the lid back to the light main circuit board (connector name Top Board). After this twist the lid three full turns before putting it back to its position on the light head chassis. This is done so that the GPS antenna cable doesn´t get caught between the lid and the light head chassis. Align the four lid screw holes with the four O-rings on the chassis.

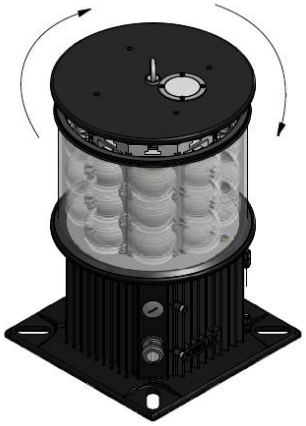

17. Screw the four hexagon-socket-head bolts back with the washers. Re-check that all the glass seals are still properly seated.

18. Connect power and verify that the unit starts up successfully.